CITY OF RIVERBANK
Regular Planning Commission Meeting
Tuesday, May 20, 2025 AT 6:00 P.M.
Council Chambers, 6707 Third St., Suite B, Riverbank CA 95367

PLANNING COMMISSION AGENDA

TUESDAY, MAY 20, 2025 **– 6:00 P.M.**
(THE AGENDA PACKET IS ONLINE AT T HTTP://WWW.RIVERBANK.ORG/AGENDACENTER)

CALL TO ORDER: Chair: Taide Zamora

ROLL CALL:
Chair: Taide Zamora
Vice Chair: Michael "Syd" Halterman
Commissioner: John Dinan
Commissioner: Joan Stewart
Commissioner: Natasha Basso
Commissioner (Alternant): Ben Reuben
Commissioner (Alternant): Armando Rodriguez

CONFLICT OF INTEREST

Any Planning Commission Member or Staff who has a direct Conflict of Interest on any scheduled agenda item to be considered is to declare their conflict at this time.

1. PUBLIC COMMENTS (No Action Can Be Taken)

At this time, members of the public may comment on any item **not appearing on the agenda** and within the subject matter jurisdiction of the Planning Commission Board. Individual comments will be limited to a **maximum of 3 minutes (or as stated by the presiding Officer)** and time cannot be yielded to another person. Under State Law, matters presented during the public comment period **cannot be discussed or acted upon**. For record purposes, state your name and City of residence. Please make your comments directly to the Planning Commission Members.

2. CONSENT CALENDAR

All items listed on the Consent Calendar are to be acted upon by a single action of the Planning Commission Board unless requested by an individual Planning Commission Member or member of the public for special consideration. Otherwise, the recommendation of staff will be accepted and acted upon by motion of the Planning Commission Board.

Item 2.1: Posting of the Agenda. The Agenda for the May 20, 2025 Planning Commission meeting was posted on the City Community Center bulletin board, City Hall North & South bulletin boards, Post Office, City website, and emailed to the Library on May 15, 2025.

Item 2.2: Approval of the May 20, 2025 Agenda. This provides an opportunity for the Planning Commission or Staff to recommend that an item be placed on the agenda for discussion or to adjust the proposed agenda to allow an item to be taken out of order.

Item 2.3: Approval of the April 15, 2025 Planning Commission Meeting minutes, having been read by the individual Commissioners and stands approved as submitted. *Abstain from voting: none.*

3.	PLANNING COMMISSION PUBLIC HEARINGS
The public notice for item 3.1 & 3.2 was published on May 7, 2025 in the Riverbank News.	

Item 3.1: Architecture and Site Plan Review 10-2024 (Dept. File #24-0027) – Sierra Triplex, 2924 Sierra St., APN:132-022-010: The proposed Project is an application for an Architecture and Site Plan Review (ASPR) for a three (3) unit, multi-family residential development located at 2924 Sierra Street. The project proposes to construct a two (2) story triplex with 1,280 square feet of living space comprised of three (3) bedrooms, two and one half (2.5) bathrooms. Additionally, seven (7) off-street parking spaces are proposed. The subject property is located within the Downtown Specific Plan (DTSP) and is therefore subject to the Development Standards established within the DTSP.

Recommendation: Approval by roll call vote.

Item 3.2: Architecture and Site Plan Review 11-2024 (Dept. File #24-0029) – Commercial Office, 3205 Sierra St., APN:132-011-051: The proposed Project is an application for an Architecture and Site Plan Review to establish a commercial office located at 3205 Sierra Street (APN 132-011-051). The Project proposes modifications to the interior of the existing structure as well as improvements to the exterior of the structure and grounds of the property. The subject property is located within the Downtown Specific Plan (DTSP) and is therefore subject to the Development Standards established within the DTSP. Per the DTSP, the proposed improvements are subject to approval by the City's Planning Commission. The proposed Project consists of maintenance and repair of an existing structure.

Recommendation: Approval by roll call vote.

4. PLANNING COMMISSION COMMENTS

5. COUNTY REFERRAL/CORRESPONDENCE/INFORMATION (Information only – No Action)

None.

6. STAFF COMMENTS (Information Only – No Action)

Item 6.1: Joshua Mann, Community Development Director to update the Commission on upcoming planning applications and Council actions.

8. ADJOURNMENT Next Regular Planning Commission meeting – June 17, 2025 @ 6:00 pm.

AFFIDAVIT OF POSTING
I hereby certify under penalty of perjury, under the laws of the State of California that the foregoing agenda was posted at the meeting location, on the North & South City Hall public exterior bulletin board, Riverbank Community Center exterior bulletin, and the City's website 72 hours prior to the meeting in accordance to the California Ralph M. Brown Act. Posted this 13th day of May, 2025. /s/ *Janet Smallen, Sr. CDS, City of Riverbank*

Any documents that are not privileged or part of a Closed Session provided to a majority of the Planning Commission Board after distribution of the agenda packet, regarding any item on this agenda, will be made available for public inspection at the City Clerk's Office, 6707 Third Street, Suite A, Riverbank, CA, during normal business hours.

ADA COMPLIANCE STATEMENT

In compliance with the Americans with Disabilities Act, and the Governor's Executive Order N-29-20, the City will make every effort to make reasonable modifications or accommodations from individuals with disabilities. Contact the Administration Dept. at (209) 863-7122 or the City Clerk at cityclerk@riverbank.org at least (48) hours prior to the meeting to enable the City to make reasonable arrangements for accessibility.

NOTICE REGARDING NON-ENGLISH SPEAKERS

Pursuant to California Constitution Article III, Section IV, establishing English as the official language for the State of California, and in accordance with California Code of Civil Procedures Section 185, which requires proceedings before any State Court to be in English, notice is hereby given that all proceedings before the City of Riverbank City Planning Commission shall be in English and anyone wishing to address the Planning Commission is required to have a translator present who will take an oath to make an accurate translation from any language not English into the English language. (Exception: When a State statute requires that at a public hearing that includes a substantial number of the population that are not able to speak or understand English, the City should provide interpreters. This determination is left at the discretion of the City.)

General Information

Meeting Schedule: The Planning Commission meets on the third Tuesday of each month at 6:00 p.m.

TELECONFERENCE/VIRUAL PLATFORM PUBLIC PARTICIPATION COMMENT PROCEDURES FOR THE PLANNING COMMISSION MEETING HELD IN CONFORMANCE WITH THE BROWN ACT

PUBLIC "LIVE" VIEWING

- Government Channels: Charter – 2 and AT&T U-VERSE – 99
- YouTube Live – City of Riverbank
- Via ZOOM Platform (See instructions below)

SUBMITTING PUBLIC COMMENTS FOR THE RECORD

Written comments must be received before 4:00 p.m. on the day of the meeting in order for them to be distributed to the Planning Commission prior to consideration of the matter. Written comments will not be read aloud at the meeting, but will be reported as received for the record. If you do not receive an acknowledgement of receipt within an hour of submission or by 5:00 p.m., please call the Planning and Building Manager at (209) 863-7124.

ACCEPTABLE METHODS OF SUBMITTING COMMENTS BEFORE THE 4:00 PM DEADLINE

- **Via Mail Service:** Mail comments to City of Riverbank, Attn. Planning and Building Manager, 6707 Third Street, Suite A, Riverbank, CA 95367.
  (Call 209-863-7124 / 209-863-7198 to ensure they were received.)

- **Via Email:** Email to jmann@riverbank.org **(Note: This technology is not a guaranteed method.)**
    - Indicate Agenda Item # in the ***subject line.*** (Call 209-863-7124 / 209-863-7198 to ensure receipt.)
- **Oral Comments In-Person:** The Chair will ask the public if anyone wishes to comment, at that time you may approach the podium.
- **Oral Comments Via Zoom:** The Chair will announce when public comments may be made for a limit of 3minutes on the agenda item being considered, at which time you will:
  (please make sure the volume on your video device or any nearby device is turned down.)
    - Using a computer – click on the "raise hand" feature in the webinar controls. This will alert staff that you wish to speak, and you will be unmuted.
    - Using a Phone – press *9 to "raise the hand". This will alert staff that you wish to speak, and you will be unmuted.

Teleconference Phone Number (This system is a backup for ZOOM technical difficulties only when providing oral comments.) If there are technical difficulties or disconnection with ZOOM while making oral comments, please immediately call the teleconference phone number (209) 863-7151 so that Planning may receive your comments. Planning will be waiting for your call. Thank you.

JOIN THE MEETING VIA ZOOM PLATFORM
Join by this link: **https://us02web.zoom.us/j/86737881996**
Join by accessing website: https://zoom.us/join, enter Webinar ID: 867 3788 1996
Join by telephone: 1-669-444-9171 OR 1-669-900-9128 or 1-336-248-27799, enter Webinar ID: 867 3788 1996

Learn about using ZOOM: - Visit https://zoom.us/j/94943925973?status+success for a free account or to download the application.

City of Riverbank

6707 Third Street ● Riverbank CA 95367
Office: (209) 863-7128 ● FAX: (209) 869-7126

This table is not for publication	
PUBLISH DATE: May 7, 2025	
DEPT.: Planning	Riverbank News

NOTICE OF PUBLIC HEARING

CITY OF RIVERBANK PLANNING COMMISSION

NOTICE IS HEREBY GIVEN that the Planning Commission of the City of Riverbank will hold a public hearing on **Tuesday, May 20, 2025, at 6:00 p.m**. or soon thereafter as practical via the Zoom virtual platform and in-person attendance in the City Council Chambers at 6707 Third Street, Suite B, Riverbank, CA. This meeting will be held in accordance with the Brown Act amendment (AB 361). This public hearing is to consider the following matter:

Architecture and Site Plan Review 10-2024 (Dept. File #24-0027) – Sierra Triplex

The proposed Project is an application for an Architecture and Site Plan Review (ASPR) for a three (3) unit, multi-family residential development located at 2924 Sierra Street. The project proposes to construct a two (2) story triplex with 1,280 square feet of living space comprised of three (3) bedrooms, two and one half (2.5) bathrooms. Additionally, seven (7) off-street parking spaces are proposed. The subject property is located within the Downtown Specific Plan (DTSP) and is therefore subject to the Development Standards established within the DTSP. The proposed Project is Categorically Exempt pursuant to CEQA Guideline Section 15332; Infill development projects that are consistent with the City's General Plan, zoning designation, and located on a site of five (5) acres or less bordered by urban uses may qualify under Section 15332.

Architecture and Site Plan Review 11-2024 (Dept. File #24-0029) – Commercial Office

The proposed Project is an application for an Architecture and Site Plan Review to establish a commercial office located at 3205 Sierra Street (APN 132-011-051). The Project proposes modifications to the interior of the existing structure as well as improvements to the exterior of the structure and grounds of the property. The subject property is located within the Downtown Specific Plan (DTSP) and is therefore subject to the Development Standards established within the DTSP. Per the DTSP, the proposed improvements are subject to approval by the City's Planning Commission. The proposed Project consists of maintenance and repair of an existing structure; therefore, the proposed Project is Categorically Exempt pursuant to CEQA Guideline Section 15301, Existing Facilities.

Planning Commission Meeting
May 20, 2025 at 6:00 pm
City Hall Council Chambers - 6707 Third St., Suite B - Riverbank, California

REPORT AVAILABILITY: Public materials pertaining to the presentation of the subject matter are made available as part of the agenda packet at http://www.riverbank.org/AgendaCenter upon distribution to a majority of the Planning Commission, (72 hours prior to the meeting), and may be viewed at the City Clerk's Office, 6707 Third St., Suite A, Riverbank, during normal business hours.

ALL INTERESTED PERSONS are invited to participate in this public meeting to express views or submit evidence for or against the subject matter being considered. Comments are not accepted via telephone. The following submission of comments are accepted for the record.

Written Comments Prior to the Meeting. Written comments may be delivered in-person to the City of Riverbank, City Clerk's Office, 6707 Third St., Suite A, Riverbank, 95367. Written comments submitted via email to jmann@riverbank.org or via Mail Delivery Service requires a follow up phone call to (209) 863-7124 for verification of receipt by staff. All written comments must be received by the City Clerk **no later than 4:00 p.m. on the day of the meeting.** Comments received by the deadline will be distributed to the Planning Commission for consideration and will be made part of the official record, but will not be read aloud during the meeting.

Oral Comments In-Person During the Meeting. Oral comments may be made at the time the Chair officially opens the hearing for public comment and in the order as called upon by the Chair. Public attendees in the Council Chambers may approach the podium upon the Chair's request to do so.

ADA COMPLIANCE: In accordance with ADA, every effort will be made to accommodate any person requiring special assistance to participate in the meeting. Contact the City Clerk at (209) 863-7198 or cityclerk@riverbank.org at least (48) hours prior to the meeting.

Questions regarding the proposed subject matter may be made to Contract City Planner Michael Arroyo at (209) 863-7124 or email planning@riverbank.org or email the City Clerk. Questions in regards to meeting procedures contact the City Clerk (209) 863-7198 or call the Administration Dept. at (209) 863-7122 prior to 4:00 p.m. on the day of the meeting.

Published this 7th day of May 2025.
/s/ Michael Arroyo, Contract Planner, City of Riverbank

AFFIDAVIT OF POSTING
I, Janette Vasquez, hereby certify under penalty of perjury under the laws of the State of California that the foregoing public notice was posted on the exterior bulletin board of North City Hall, South City Hall, and at the Community Center, Riverbank, CA. Dated this 7th day of May 2025. /s/ Janette Vasquez, Community Development Specialist I, Riverbank, CA

For official use only:

Posted: 4/30/2025	Publish: 5/7/2025	Remove: 5/8/2025

NOTICE OF PUBLIC HEARING
CITY OF RIVERBANK PLANNING COMMISSION

NOTICE IS HEREBY GIVEN that the Planning Commission of the City of Riverbank will hold a public hearing on **Tuesday, May 20, 2025, at 6:00 p.m.** or soon thereafter as practical via the Zoom virtual platform and in-person attendance in the City Council Chambers at 6707 Third Street, Suite B, Riverbank, CA. This meeting will be held in accordance with the Brown Act amendment (AB 361). This public hearing is to consider the following matter:

Architecture and Site Plan Review 10-2024 (Dept. File #24-0027) – Sierra Triplex The proposed Project is an application for an Architecture and Site Plan Review (ASPR) for a three (3) unit, multi-family residential development located at 2924 Sierra Street. The project proposes to construct a two (2) story triplex with 1,280 square feet of living space comprised of three (3) bedrooms, two and one half (2.5) bathrooms. Additionally, seven (7) off-street parking spaces are proposed. The subject property is located within the Downtown Specific Plan (DTSP) and is therefore subject to the Development Standards established within the DTSP. The proposed Project is Categorically Exempt pursuant to CEQA Guideline Section 15332; Infill development projects that are consistent with the City's General Plan, zoning designation, and located on a site of five (5) acres or less bordered by urban uses may qualify under Section 15332.

Architecture and Site Plan Review 11-2024 (Dept. File #24-0029) – Commercial Office The proposed Project is an application for an Architecture and Site Plan Review to establish a commercial office located at 3205 Sierra Street (APN 132-011-051). The Project proposes modifications to the interior of the existing structure as well as improvements to the exterior of the structure and grounds of the property. The subject property is located within the Downtown Specific Plan (DTSP) and is therefore subject to the Development Standards established within the DTSP. Per the DTSP, the proposed improvements are subject to approval by the City's Planning Commission. The proposed Project consists of maintenance and repair of an existing structure; therefore, the proposed Project is Categorically Exempt pursuant to CEQA Guideline Section 15301, Existing Facilities.

Planning Commission Meeting
May 20, 2025 at 6:00 pm
City Hall Council Chambers - 6707 Third St., Suite B - Riverbank, California

REPORT AVAILABILITY: Public materials pertaining to the presentation of the subject matter are made available as part of the agenda packet at **http://www.riverbank.org/AgendaCenter** upon distribution to a majority of the Planning Commission, (72 hours prior to the meeting), and may be viewed at the City Clerk's Office, 6707 Third St., Suite A, Riverbank, during normal business

hours.

ALL INTERESTED PERSONS are invited to participate in this public meeting to express views or submit evidence for or against the subject matter being considered. Comments are not accepted via telephone. The following submission of comments are accepted for the record.

Written Comments Prior to the Meeting. Written comments may be delivered in-person to the City of Riverbank, City Clerk's Office, 6707 Third St., Suite A, Riverbank, 95367. Written comments submitted via email to jmann@riverbank.org or via Mail Delivery Service requires a follow up phone call to (209) 863-7124 for verification of receipt by staff. All written comments must be received by the City Clerk no later than **4:00 p.m. on the day of the meeting**. Comments received by the deadline will be distributed to the Planning Commission for consideration and will be made part of the official record, but will not be read aloud during the meeting.

Oral Comments In-Person During the Meeting. Oral comments may be made at the time the Chair officially opens the hearing for public comment and in the order as called upon by the Chair. Public attendees in the Council Chambers may approach the podium upon the Chair's request to do so.

ADA COMPLIANCE: In accordance with ADA, every effort will be made to accommodate any person requiring special assistance to participate in the meeting. Contact the City Clerk at (209) 863-7198 or cityclerk@riverbank.org at least (48) hours prior to the meeting.

Questions regarding the proposed subject matter may be made to Contract City Planner Michael Arroyo at (209) 863-7124 or email planning@riverbank.org or email the City Clerk. Questions in regards to meeting procedures contact the City Clerk (209) 863-7198 or call the Administration Dept. at (209) 863-7122 prior to 4:00 p.m. on the day of the meeting.

Published this 7th day of May 2025.

/s/ Michael Arroyo, Contract Planner, City of Riverbank

May 7, 2025

RN#25-051

City of Riverbank
Planning Commission Meeting
City Hall North • Council Chambers
6707 Third Street • Suite B • Riverbank • CA 95367

MINUTES

Tuesday, April 15, 2025
(In-Person)

The following minutes reflect action minutes, with added clarification for the record. A copy of the verbatim recording may be obtained, if available, for a fee by contacting the Development Services Department at (209) 863-7128.

CALL TO ORDER/ROLL CALL:

Present: Commissioners: Zamora (Chair), Halterman (Vice Chair), Dinan, Stewart, Basso and Rodriquez (Alternate)

Absent: Reuben (Alternate)

CONFLICT OF INTEREST: Any Planning Commissioner and Staff who would have a direct Conflict of Interest on any scheduled agenda item to be considered are to declare their conflict.

None.

1. PUBLIC COMMENTS (No action to be taken)

At this time, members of the public may comment on any item not appearing on the agenda, and within the subject matter jurisdiction of the Planning Commission. Individual comments will be limited to a **maximum of 3 minutes** per person and each person may speak once during this time; time cannot be yielded to another person. Under State Law, matters presented during the public comment period cannot be discussed or acted upon. For record purposes, state your name and City of residence. Please make your comments directly to the Planning Commission.

- *Marie Ricks Garaza spoke against the proposed tiny home project on the corner of Morrill Ave. and Oakdale Rd.*
- *Karen Comrotto spoke against the River Walk proposed project.*
- *Michael Cristie spoke against the proposed tiny home project on the corner of Morrill Ave. and Oakdale Rd.*
- *With no further comments public comments was closed at 6:07 p.m.*

2. CONSENT CALENDAR

All items on the Consent Calendar are to be acted upon by a single action of the Planning Commission unless otherwise requested by an individual Planning Commissioner for special consideration. Otherwise, the recommendation of staff will be accepted and acted upon by roll call vote.

Item 2.1: Posting of the Agenda. The Agenda for the April 15, 2025, Planning Commission Meeting was posted on the City Community Center bulletin board, City Hall North & South bulletin boards, Post Office, city website and emailed to the Library on April 10, 2025.

Item 2.2: Approval of the April 15, 2025 Agenda. This provides an opportunity for the Planning Commission or Staff to recommend that an item be placed on the agenda for discussion or to adjust the proposed agenda to allow an item to be taken out of order.

Item 2.3: Approval of the March 18, 2025 Planning Commission Meeting minutes, having been read by the individual Commissioners and stands approved as submitted. *Abstain from voting: none*.

ACTION: *By motion moved/second (Stewart/Basso passed 5-0) was approved as submitted; Motion carried by unanimous roll call vote.*

Ayes: Planning Commissioners: Zamora, Halterman, Stewart, Basso and Dinan

Nays: None

Absent: Reuben (Alternate)

3. PLANNING COMMISSION PUBLIC HEARINGS

The public notice for item 3.1 was published on April 2, 2025 in the Riverbank News Paper.

Item 3.1: **Conditional Use Permit No. 01-2025** – (Dept. File #25-0006) – **Riverbank Food Center Inc.** The proposed Project is an application for a Conditional Use Permit to allow the sale of beer and wine for off-site consumption only (Type 20 license off-sale). The Conditional Use Permit is for an existing supermarket building located at 6524 3rd St. Pursuant to CEQA Guidelines, the proposed Project is exempt per Article 19, Section 15301, Existing Facilities.

- Michael Arroyo, contract planner with JB Anderson presented item 3.1 and Power Point.
- Staff had no comments
- Public comment was opened at 6:16 p.m. with no comments.

ACTION: *By motion moved/second (Halterman / Basso passed 5-0) was approved as submitted; Motion carried by unanimous roll call vote.*

Ayes: Planning Commissioners: Zamora, Halterman, Stewart, Basso and Dinan

Nays: None

Absent: Reuben (Alternate)

4. PLANNING COMMISSION COMMENTS

John Dinan informed the Commission that he met with residents at city hall conference that wanted to meet with him to discuss River Walk.

5. COUNTY REFERRAL/CORRESPONDENCE/INFORMATION

None.

6. STAFF COMMENTS (Information only – No Action)

- Josh Mann, Community Development Director gave an update to the Commission on items that have gone to City Council and future upcoming items coming to the Planning Commission.

7. ADJOURNMENT - Regular Planning Commission Meeting – April 15, 2025.

ATTEST:

Joshua Mann
Community Development Director

APPROVED:

Taide Zamora
Planning Commission Chair

CITY OF RIVERBANK
PLANNING COMMISSION
STAFF REPORT

ITEM NO:	**3.1**	**May 20, 2025**

APPLICATION: **Architecture & Site Plan Review 10-2024 (Dept. File 24-0027) – Sierra Triplex (APN: 132-022-010).** The Applicant is requesting Architecture and Site Plan Review for a proposed multi-family triplex located at 2924 Sierra Street.

OWNER: Sammy Allatry
5213 Equine Court
Riverbank, CA 95367

APPLICANT: Sammy Allatry
5213 Equine Court
Riverbank, CA 95367

LOCATION: 2924 Sierra Street; APN: 132-022-010

GENERAL PLAN: Higher Density Residential (HDR)

ZONING: Neighborhood Commercial (C-1)

DOWNTOWN SPECIFIC PLAN: Mixed Use (MU)

ENVIRONMENTAL DETERMINATION: Pursuant to CEQA Guidelines, the proposed project is exempt per Article 19, Section 15332 – Infill Development Projects

PROJECT PLANNER: Michael Arroyo, Contract Planner

RECOMMENDATION: Adopt Resolution No. 2025-004, approving Architecture and Site Plan Review No. 10-2024.

ACRONYMS:
CEQA – California Environmental Quality Act
CFD – Community Facilities District
DU – Dwelling Units
LDR – Low Density Residential
LID – Low Impact Design
RMC – Riverbank Municipal Code

I. EXECUTIVE SUMMARY

The proposed Project consists of the construction and development of a new two-story, multi-family triplex on a vacant, undeveloped parcel located east of Callander Avenue, South of Stanislaus Street, west of Railroad Avenue and north of Patterson Road. As part of the development, the Project proposes seven (7) off-street parking spaces, and 326 square feet of turf with a table for common outdoor space for residents.

II. BACKGROUND AND ANALYSIS

The subject property is approximately 10,710 sq. ft., is unimproved and backs to an alley way. The Project site is bounded by residential development in all directions with some vacant parcels located south of the project site. The proposed Project is consistent with the neighboring properties and existing uses in close proximity to the subject property. The project site is contiguous to an eighteen (18) unit, two-story, multi-family residential apartment complex along its eastern boundary, and other similar multi-family residential properties located north and west of the Project site. The picture below illustrates the location of the proposed Project and surrounding properties.

The subject property has a General Plan Land Use designation of Higher Density Residential (HDR) and properties with this designation are anticipated to be developed for all types of attached single-family and multi-family housing, including condominiums, apartment buildings, townhouses and other similar residential structures. The HDR designation allows for a density of sixteen (16) or more dwelling units per acre, and the proposed Project is consistent with the permitted density of the City's General Plan with a density of twelve (12) dwelling units per acre.

The subject property is located within the City's Downtown Specific Plan (DTSP) and sits within the Mixed Use (MU) district zone. The MU zone encourages new investment to create an urban neighborhood in the DTSP. Per the DTSP, development of the many sites within the specific plan provides opportunities for new investment that complements existing residences and businesses. The proposed Project is consistent with the permitted uses and development standards of the DTSP, and will be conditioned to adhere to these established standards.

ARCHITECTURE & SITE PLAN REVIEW

The proposed Project consists of a new triplex with each dwelling unit offering 1,280 sq. ft. of living space. Each unit will have three (3) bedrooms, and two and one half (2 & 1 ½) bathrooms with each bedroom located on the second floor. A dining and living area, kitchen, half-bath, and laundry room will be located on the first floor of each unit. Each unit will be oriented with the same configuration with the entryway facing west; a sliding glass door will be located at the rear of each structure, and a small, concrete landing will be installed. The first floor will equal 636 sq. ft. while the second floor will be marginally larger at approximately 644 sq. ft.

The proposed triplex will install a gable roof comprised of composition shingles. The exterior of the structure will have a stucco finish with a light, neutral color; the applicant is utilizing Valspar paint throughout with a Gallery Grey trim. Each unit will have a small covered entryway, painted in a neutral stone color enhancing the curb appeal and providing functional cover.

The Project site will be further improved with a four (4) inch tall, two (2) foot wide concrete curb spanning the perimeter. Five (5) gallon sized Orchid Rockrose and New Zealand Flax will be installed along the perimeter of the site enhancing the aesthetics of the site. Additionally, all shrub area will receive a three (3) inch layer of bark to further enhance the landscaping. As a Condition of Approval, the proposed Project will be required to improve the alleyway spanning the width of the Project site, and provide access to the site via the alleyway. Additionally, while there is existing curb and gutter along the Project's Sierra Street frontage, the proposed Project will be conditioned to install frontage improvements including curb, gutter and sidewalk.

III. GENERAL PLAN CONSISTENCY

The Architecture and Site Plan Review is consistent with the following General Plan policies:

Policy LAND-2.4 "The City will encourage re-use of vacant or underutilized land in the Infill Opportunity Area through policies that seek to encourage more intense infill development."

The proposed Project includes the construction of a new multi-family residential development on an unimproved, vacant parcel. Not only will the proposed Project add value to the existing neighborhood, but will also add three (3) new residential units to the City's housing stock.

Policy DESIGN-12.3 "The City will encourage, through incentives, streamlining, flexibility in development standards, and other means, infill buildings along vacant or underutilized sections of the street edge to improve the environment for pedestrians."

The proposed Project will be developed on a vacant and unimproved parcel which lacks partial frontage improvements. As part of the development, the proposed Project will be required to install curb, gutter and sidewalk. As a result, the proposed Project will ultimately improve the environment for pedestrians by extending walkability and connectivity further west.

IV. ENVIRONMENTAL DETERMINATION

Pursuant to the California Environmental Quality Act, the proposed Project is exempt pursuant to CEQA Guidelines Section 15332, Infill Development Projects.

V. PUBLIC NOTICE

On May 5, 2025, public notices for the Planning Commission hearing were mailed to interested parties and property owners within 300 feet of the project location. The Planning Commission hearing notice was published in the Riverbank News on May 7, 2025. The notice was posted on the City's website and physically posted at City Hall North, South, the post office and sent to the library on May 5, 2025. The subject property public notice sign was posted on May 5, 2025.

VI. RECOMMENDATION

Adopt Resolution No. 2025-004, approving Architecture and Site Plan Review No. 10-2024.

VII. ATTACHMENTS

1. Planning Commission Resolution No. 2025-004 (ASPR 10-2024)
   Exhibit A – Plans and Elevations
   Exhibit B – Conditions of Approval

Respectfully Submitted By:

Michael Arroyo

Michael Arroyo
Contract Planner

City of Riverbank
Planning Commission
Resolution No. 2025-004

APPROVAL OF ARCHITECTURE SITE PLAN REVIEW 10-2024
FOR THE SIERRA TRIPLEX, LOCATED AT 2924 SIERRA STREET
APN: 132-022-010

WHEREAS, an Architecture and Site Plan Review application has been received from Sammy Allatry with a proposal for a multi-family residential triplex located at 2924 Sierra Street (APN: 132-022-010); and

WHEREAS, the Project site has a General Plan Land Use designation of High Density Residential (HDR) and zoning designation of Neighborhood Commercial (C-1); and

WHEREAS, the Project site also has a Downtown Specific Plan zoning designation of Mixed Use (MU); and

WHEREAS, the proposed Project is consistent with the City of Riverbank's General Plan Land Use designation and Downtown Specific Plan zoning designation; and

WHEREAS, the proposed Project is consistent with the permitted uses of the Mixed-Use designation of the Downtown Specific Plan which allows multifamily residential uses; and

WHEREAS, the Planning Commission held a public hearing on May 20, 2025, to consider Architecture and Site Plan Review 10-2024 and take public comment; and

WHEREAS, the proposed Project is exempt from analysis pursuant to the California Environmental Quality Act (CEQA) Guidelines Section 15332, Infill Development Projects; and

WHEREAS, the City of Riverbank Planning Commission made the following findings:

1. The proposed Project, together with the provisions for its design and improvements, is consistent with the goals, policies, program and uses of the General Plan.

2. The proposed Architecture and Site Plan Review along with the Conditions of Approval is in conformity with both the intent and provisions of the Zoning Ordinance, Title 153, of the City of Riverbank Code of Ordinances.

WHEREAS, the proposed project is consistent with the following aspects of the General Plan:

1. Policy LAND-2.4: The City will encourage re-use of vacant or underutilized land in the Infill Opportunity Area through policies that seek to encourage more intense infill development.

2. Policy DESIGN-12.3: The City will encourage, through incentives, streamlining, flexibility in development standards, and other means, infill buildings along vacant or underutilized sections of the street edge to improve the environment for pedestrians.

WHEREAS, the plans and elevations of Sammy Allatry are hereby granted and approved, subject to the following conditions:

1. Applicant shall comply with the Project specific Conditions of Approval as outlined in "**Exhibit B**"; and

2. The Applicant shall build the entire project according to the floor plans and elevations date stamped September 25, 2024 and on file with the Community Development Department and as presented to the Planning Commission as part of this action.

NOW THEREFORE, BE IT RESOLVED by the City of Riverbank Planning Commission that Architecture and Site Plan Review 10-2024 is hereby approved, subject to those conditions established by Resolution No. 2025-004 and as illustrated in "**Exhibit A**" Plans and Elevations.

PASSED AND ADOPTED by the Planning Commission of the City of Riverbank at a meeting held on the 20th of May, 2025; motioned by Commissioner _____, seconded by Commissioner _____, and upon roll call was carried by the following vote of __-__:

AYES: Commissioners:

NOES:

ABSENT:

ABSTAIN:

Attest:

_____
Joshua E. Mann,
Community Development Director

Approved:

_____
Taide Zamora, Chairperson
Planning Commission

Exhibit A – Plans and Elevations
Exhibit B – Conditions of Approval

EXHIBIT "A"

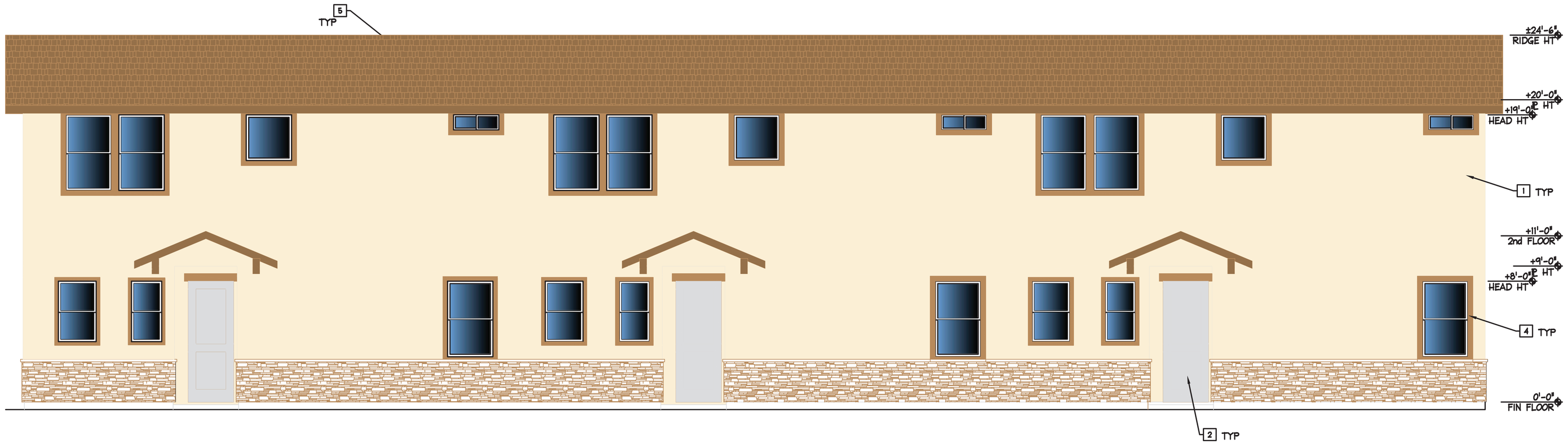

WEST ELEVATION

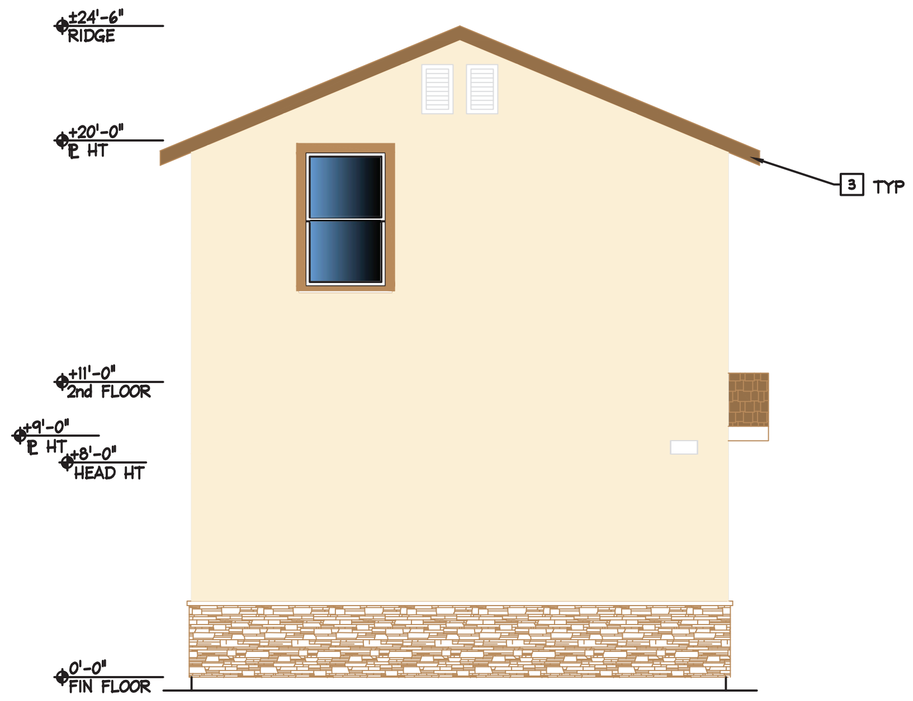

NORTH ELEVATION

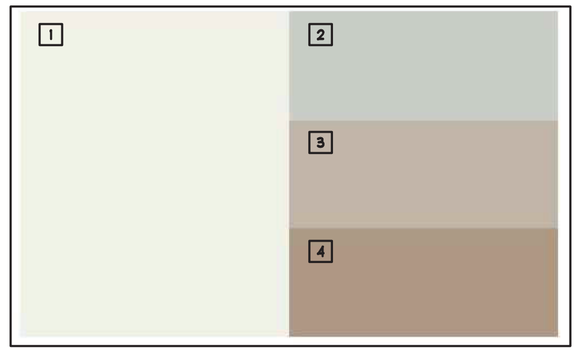

EXTERIOR MATERIALS SCHEDULE

1. ⅞" THICK STUCCO (SAND TEXTURE) VALSPAR 7002-16 - SWISS COFFEE
2. VALSPAR 4008-1A - BAY WAVES
3. VALSPAR 2006-10B - GALLERY GREY
4. VALSPAR 2007-9C - WOODLAND STONE
5. GAF TIMBERLINE COMPOSITION SHINGLES - BARKWOOD ALGAE #0448070

EXTERIOR ELEVATIONS

1/4" = 1'-0"

REV	DATE	DESCRIPTION	BY

DATE: 04/25/24

SCALE: As Noted

PREPARED BY:

PBPdrafting&design
pbpdrafting@aol.com

2924 Sierra St, Riverbank, CA 95367
Residence for Sammy Allatry

Exterior Elevations

EL1

PBPDRAFTING EXPRESSLY RESERVES ITS COMMON LAW COPYRIGHT AND OTHER PROPERTY RIGHTS IN THESE PLANS. THEY MAY NOT BE REPRODUCED, CHANGED, COPIED, ASSIGNED TO ANY OR USED FOR OTHER THAN THAT INT

Triplex
for Sammy Allatry

1. CHEMICAL TOILET IS REQUIRED ON-SITE DURING CONSTRUCTION OR USE OF EXISTING TOILETS IF AVAILABLE.
2. PROVIDE 5% SLOPE AWAY FROM PROPOSED ADDITION FOR A MINIMUM OF 10 FEET PER CBC APPENDIX 1803A.3. WHERE NOT ABLE TO PROVIDE SLOPE FOR 10 FEET, PROVIDE AN APPROVED ALTERNATE METHOD OF DIVERTING WATER. RAINWATER RUNOFF SHALL NOT ENCROACH ONTO ADJACENT PROPERTIES.
3. DWELLING TO BE EQUIPPED WITH FIRE SPRINKLER SYSTEM.
   - FIRE SPRINKLERS SHALL BE INSTALLED PER 2022 CRC 313.2 PLANS AND CALCULATIONS TO BE DONE UNDER SEPARTE PERMIT.
   - APPROVED FIRE SPRINKLER PLANS TO BE ON-SITE AT THE FRAME INSPECTION.
4. DWELLING TO BE EQUIPPED WITH PHOTOVOLTAIC SYSTEM. PLANS AND CALCULATIONS TO BE DONE UNDER SEPARTE PERMIT.
5. PHOTOVOLTAIC PLANS SHALL BE SUBMITTED AND APPROVED PRIOR TO THE ROUGH ELECTRICAL INSPECTION. PERMIT WILL NOT BE FINALED THE PHOTOVOLTAIC PERMIT IS FINALED

HERS FEATURE SUMMARY:
INDOOR AIR QUALITY VENTILATION
KITCHEN RANGE HOOD
MINIMUM AIRFLOW
VERIFIED EER/EER2
FAN EFFICACY WATTS/CFM
VERIFIED HSPF2
VERIFIED HEAT PUMP RATED HEATING CAPACITY
DUCT LEAKAGE TESTING

SITE NOTES

ABBREVIATIONS:

NOT ALL ABBREVIATIONS MAY BE USED ON THIS PROJECT

AFF	ABOVE FINISH FLOOR
BLDG.	BUILDING
CBC	CALIFORNIA BUILDING CODE
CMU	CONCRETE MASONRY UNIT
F.F.	FINISH FLOOR
NTS	NOT TO SCALE
OC	ON CENTER
SIM.	SIMILAR
T.O.	TOP OF
TYP	TYPICAL
W/	WITH
W/O	WITH OUT

LEGEND:

ELEVATION

2 SD1 — DETAIL DESIGNATION

2 A3 — ELEVATION VIEW

2 A3 — CROSS SECTION

N — NORTH ARROW

1. ALL CONSTRUCTION SHALL EQUAL OR EXCEED THAT SHOWN OR DESCRIBED IN THESE PLANS AND SPECIFICATIONS.
2. CONTRACTOR SHALL VERIFY ALL POINTS OF CONNECTION WITH THE LOCAL UTILITIES SERVING PROPOSED RESIDENCE.
3. CONTRACTOR SHALL VERIFY ALL DIMENSIONS AND CONDITIONS ON SITE PRIOR TO COMMENCEMENT OF WORK. ALL DIMENSIONS SHALL TAKE PRECEDENCE OVER SCALED DRAWINGS.
4. NOTES AND DETAILS SHOWN ON THESE DRAWINGS SHALL TAKE PRECEDENCE OVER STANDARD DETAILS. NOTES AND DETAILS SHOWN ARE TYPICAL IN ALL CASES UNLESS ORTHEWISE NOTED.
5. ALL LOAD BEARING MEMBERS, IE: STUDS, JOISTS, RAFTERS, HEADERS, PRESSURE TREATED MUD SILLS ECT. SHALL BE DOUGLAS FIR NO.2 STANDARD OR BETTER WITH GRADEMARK STAMP OF ASSOCIATION COVERING SPECIES AND GRADING RULES GOVERNING. U.O.N.
6. NAILING FOR ALL CONNECTIONS OF WOOD SHALL BE AS REQUIRED IN TABLE 2304.10.1 "FASTENING SCHEDULE" OF THE CURRENT CALIFORNIA BUILDING CODE.
7. PROVIDE APPROVED FLASHING FOR ALL EXTERIOR OPENINGS, VALLEYS AND OTHER AREAS SPECIFIED. USE 26 GAUGE GALVANIZED IRON FOR ALL VALLEYS AS FOLLOWS;
   A) 24 INCHES WIDE IF ROOF SLOPE IS LESS THAN A 4:12 PITCH OR AT ALL SHAKE ROOFS.
   B) 18 INCHES WIDE IF ROOF SLOPE IS GREATER THAN A 4:12 PITCH.
   C) PROVIDE 3/4 INCH HIGH RIDGE FOR ALL ROOF COVERINGS EXCEPT SHAKES.
   D) PROVIDE 1 INCH HIGH RIDGE AT ALL SHAKE COVERED ROOFS.
8. PROVIDE SCREENED EAVE VENTS TOGETHER WITH RIDGE OR GABLE END VENTS WHERE APPLICABLE.
9. PROVIDE WOOD STOOLS AND APRONS AT ALL WINDOWS.
10. PROVIDE SAFETY GLASS FOR WINDOWS AND DOORS AS REQUIRED BY CBC 2406 WINDOWS WITHIN 24" IN ANY DIRECTION OF A DOOR SHALL BE TEMPERED GLASS.
11. PROVIDE DOWNSPOUTS, GUTTERS AND 24 INCH CONCRETE SPLASH BLOCKS AT ALL EAVES PARALLEL TO FRONT ENTRANCES AND WALKS OR AS NOTED WITHIN THESE DRAWINGS.
12. WATERPROOF GYPSUM WALLBOARD (PURPLE BOARD) OVERLAYED w/ MIN. GRADE B BUILDING PAPER AND WIRE LATH OR GLASS MAT/FIBER-REINFORCED (HARDIBACKER, CEMENT BOARD) AT BATHROOMS. WATER-RESISTANT GYPSUM BOARD SHALL NOT BE INSTALLED OVER A CLASS I OR II VAPOR RETARDER IN A SHOWER OR TUB COMPARTMENT.
13. GYPSUM BOARD SHALL NOT BE USED WHERE THERE WILL BE DIRECT EXPOSURE TO WATER, OR IN AREAS SUBJECT TO CONTINUOUS HIGH HUMIDITY. CRC R702.3.7.1
14. SURFACE WATER WILL DRAIN AWAY FROM BUILDING, BUT NOT ACROSS PROPERTY LINES.

GENERAL NOTES

OCCUPANCY TYPES

RESIDENTIAL	(R-3/U)
GARAGE	(U-1)
TYPE OF CONSTRUCTION	V-B
NO. OF STORIES	2

BUILDING AREA UNIT 1:	
LIVING	1280 SQ FT
-FIRST FLR	636 SQ FT
-SECOND FLR	644 SQ FT
PORCH	8 SQ FT
BUILDING AREA UNIT 2:	
LIVING	1280 SQ FT
-FIRST FLR	636 SQ FT
-SECOND FLR	644 SQ FT
PORCH	8 SQ FT
BUILDING AREA UNIT 3:	
LIVING	1280 SQ FT
-FIRST FLR	636 SQ FT
-SECOND FLR	644 SQ FT
PORCH	8 SQ FT

AREA STATEMENT

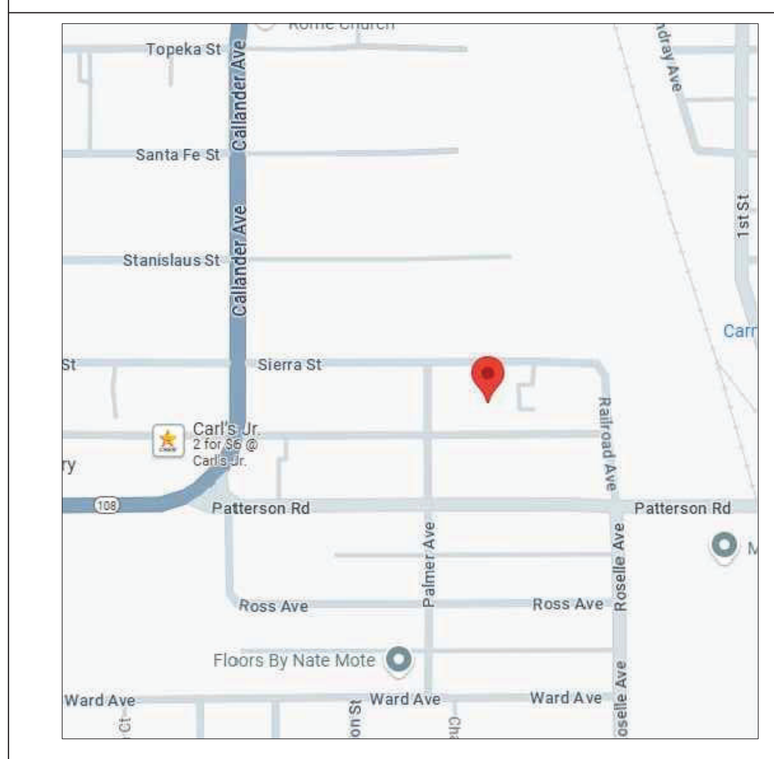

NOT TO SCALE

VICINITY MAP

THIS PROJECT WILL CONFORM TO THE:
2022 CALIFORNIA RESIDENTIAL CODE (CRC)
2022 CALIFORNIA BUILDING CODE (CBC)
2022 CALIFORNIA ELECTRICAL CODE (CEC)
2022 CALIFORNIA GREEN BUILDING STANDARDS
2022 CALIFORNIA MECHANICAL CODE (CMC)
2022 CALIFORNIA PLUMBING CODE (CPC)
2022 CALIFORNIA FIRE CODE (CFC)
2022 CALIFORNIA ENERGY STANDARDS
LOCAL MUNICIPAL CODE

APPLICABLE CODES

- CONSTRUCT NEW MULTIFAMILY RESIDENCE WITH ATTACHED GARAGE

SCOPE OF WORK

C1	Cover Sheet - General Notes
AS.1	Site Plan
LS.1	Landscaping Plan
A1.1	First Floor Plan
A1.2	Second Floor Plan
A2.1	Exterior Elevations
A2.2	Exterior Elevations
A3	Foundation Plan
A4.1	Second Floor Framing Plan
A4.2	Roof Framing Plan
A5	Cross Sections
AD	Details
AD1	Details
AD2	Details
E1.1	First Floor Electrical Plan
E1.2	Second Floor Electrical Plan
E1.2	Electrical, Plumb, & Mech. Notes
CG-1	California Green Bldg Standards
CG-2	California Green Bldg Standards
T24-A	Energy Calculations
T24-B	Energy Calculations
T24-C	Energy Calculations

SHEET INDEX

REV	DATE	DESCRIPTION	BY

DATE: 09/25/24
SCALE: As Noted

PREPARED BY:
PBPdrafting&design
pbpdrafting@aol.com

2924 Sierra St, Riverbank, CA 95367
Residence for Sammy Allatry

General Notes

C1

PBPDRAFTING EXPRESSLY RESERVES ITS COMMON LAW COPYRIGHT AND OTHER PROPERTY RIGHTS IN THESE PLANS. THEY MAY NOT BE REPRODUCED, CHANGED, COPIED, ASSIGNED TO ANY OR USED FOR OTHER THAN THAT INTENDED WITHOUT FIRST OBTAINING THE WRITTEN PERMISSION AND CONSENT BY DESIGNER

PBPDRAFTING EXPRESSLY RESERVES IT'S COMMON LAW COPYRIGHT AND OTHER PROPERTY RIGHTS IN THESE PLANS. THEY MAY NOT BE REPRODUCED, CHANGED, COPIED, ASSIGNED TO ANY OR USED FOR OTHER THAN THAT INTENDED WITHOUT FIRST OBTAINING THE WRITTEN PERMISSION AND CONSENT BY DESIGNER

SITE PLAN

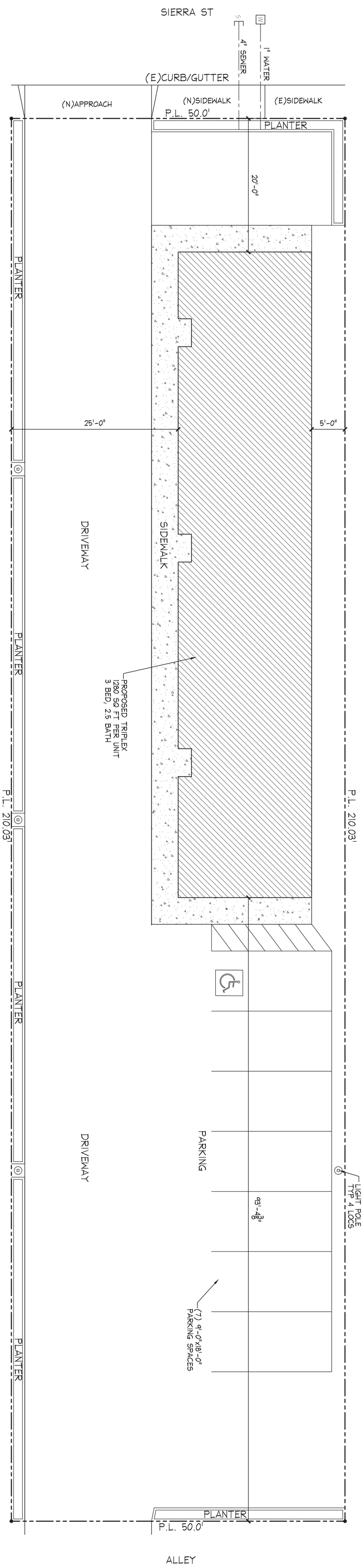

1/8" = 1'-0"

N

AS1

2924 Sierra St, Riverbank, CA 95367
Residence for Sammy Allatry

Site Plan

PREPARED BY:

PBPdrafting$design
pbpdrafting@aol.com

DATE: 09/25/24

SCALE: As Noted

REV	DATE	DESCRIPTION	BY

PBDRAFTING EXPRESSLY RESERVES IT'S COMMON LAW COPYRIGHT AND OTHER PROPERTY RIGHTS IN THESE PLANS. THEY MAY NOT BE REPRODUCED CHANGED COPIED ASSIGNED TO ANY OR USED FOR OTHER THAN THAT INTENDED WITHOUT FIRST OBTAINING THE WRITTEN PERMISSION AND CONSENT BY DESIGNER

PLANTING NOTES

1. PLANTING AREAS SHALL RECEIVE PER 1000 SQ FT 6 CU. YARDS OF 100% FIR OR PINE BARK MULCH WITH AN ORGANIC CONTENT OF 95% 10 LBS OF 15-15-15 FERTILIZER TILLED INTO THE TOP 6" OF SOIL. THESE QUANTITIES SHALL BE USED FOR BID PURPOSES.
2. PLANT TREES, SHRUBS, GROUND COVERS, AND VINES AS PER DETAILS.
3. NO PLANTINGS SHALL BE STARTED UNTIL FINISHED GRADING HAS BEEN APPROVED BY OWNER.
4. AFTER PLANTS AND GROUND COVERS ARE PLANTED AND BEFORE TOP DRESSING OF AREAS, APPLY RONSTAR PRE-EMERGENCE PER MFR'S DIRECTIONS. APPLY 3" OF 3/4" TO 1" PINE OR FIR BARK CHIPS.
5. PLANTS TO BE GUARANTEED 60 DAYS AND TREES FOR ONE YEAR FROM DATE OF FINAL ACCEPTANCE.
6. A 60 DAY MAINTENANCE PERIOD WILL COMMENCE UPON WRITTEN FINAL ACCEPTANCE BY THE OWNER. UNHEALTHY PLANTS SHALL BE REPLACED AT THE END OF THE 60 DAY MAINTENANCE PERIOD AND ANY UNHEALTY TREES SHALL BE REPLACED AT THE END OF THE ONE YEAR PERIOD.
7. OWNER TO APPROVE TREES AND SHRUBS BEFORE PLANTING. ANY PLANTS REJECTED SHALL BE IMMEDIATELY REMOVED FROM THE JOB SITE.
8. LANDSCAPE CONTRACTOR SHALL SUBMIT ORIGINAL DELIVERY TAGS OF ALL PLANT MATERIALS, FERTILIZER, HUMUS, TOP DRESSING AND PRE-EMERGENCE WEED KILLER TO THE OWNER BEFORE FINAL ACCEPTANCE.
9. ALL SHRUB AREAS TO RECEIVE A 3" LAYER OF BARK EXCEPT AREAS NOTED.

GROUND COVERS, SHRUBS AND VINES

LATIN NAME	COMMON NAME	SIZE	QUAN.	SPACING	WATER
Cistus x purpureus	Orchid Rockrose	5 gal.	52	5'	L
Phormium 'Rainbow Maiden'	New Zealand Flax	5 gal.	55	4'	L
Turf – Fescue Sod			326 sf		H

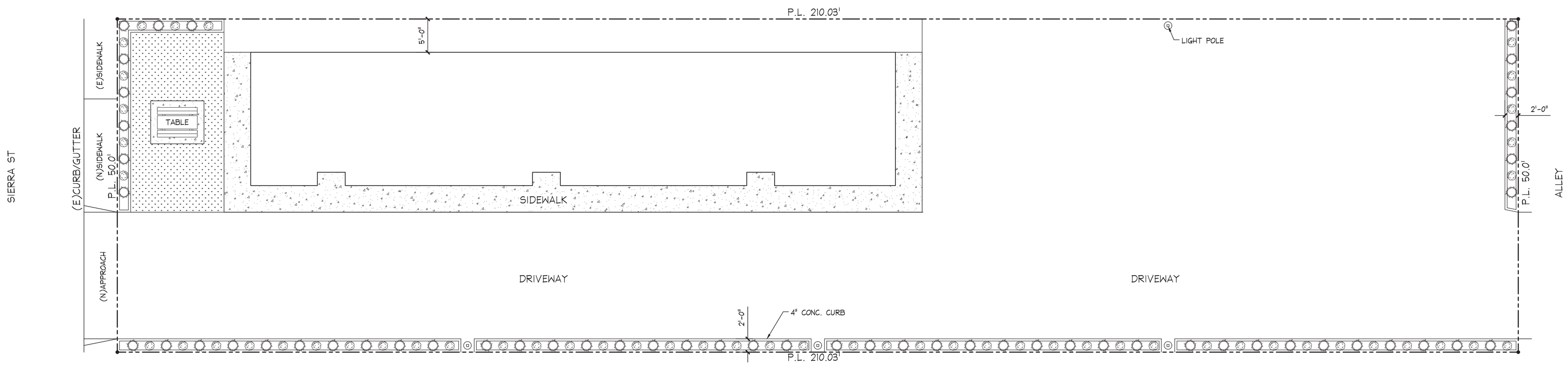

LANDSCAPING PLAN

1/8" = 1'-0"

REV	DATE	DESCRIPTION	BY

DATE: 09/25/24

SCALE: As Noted

PREPARED BY:

PBDrafting@design
pbdrafting@aol.com

2924 Sierra St, Riverbank, CA 95367
Residence for Sammy Alatry

Landscapting Plan

LS1

PBPDRAFTING EXPRESSLY RESERVES IT'S COMMON LAW COPYRIGHT AND OTHER PROPERTY RIGHTS IN THESE PLANS. THEY MAY NOT BE REPRODUCED, CHANGED, COPIED, ASSIGNED TO ANY OR USED FOR OTHER THAN THAT INTENDED WITHOUT FIRST OBTAINING THE WRITTEN PERMISSION AND CONSENT BY DESIGNER

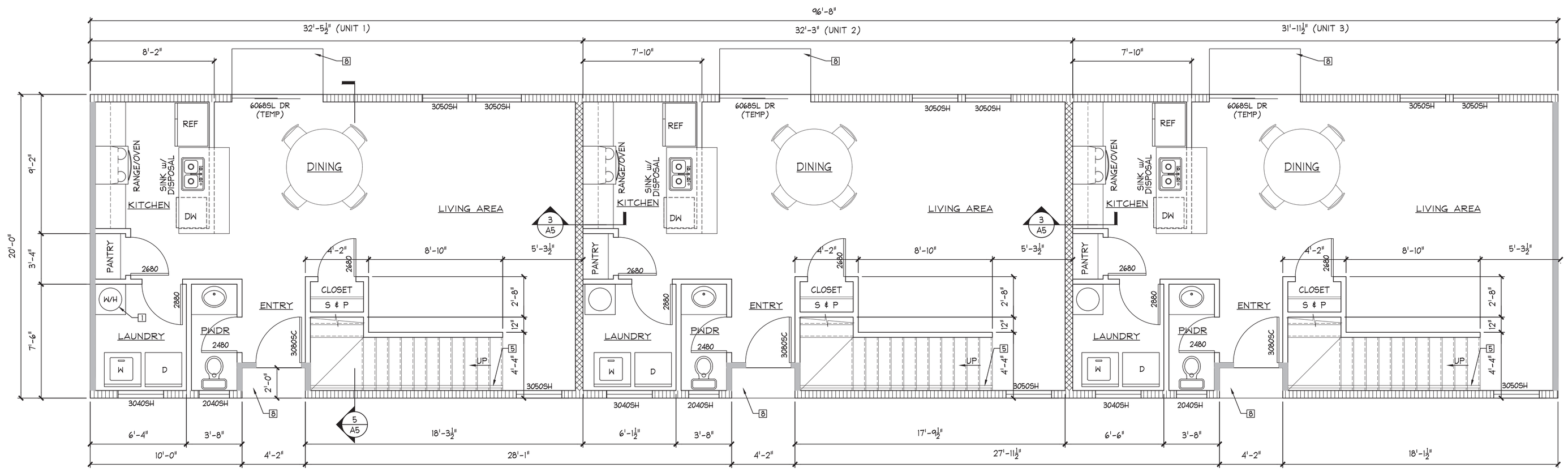

WALL LEGEND

- EXTERIOR WALL. 2x6 D.F.#2 STUDS @ 16" o/c. w/ ½" GYP. BD. ON INSIDE w/ R-19 INSULATION. STUCCO @ EXTERIOR
- EXTERIOR WALL. 2x4 D.F. #2 STUDS @ 16" o/c. w/ ½" GYP. BD. ON INSIDE w/ R-15 INSULATION. STUCCO @ EXTERIOR
- INTERIOR WALL. 2x4 D.F. #2 STUDS @ 16" o/c. w/ ½" GYP. BD. BOTH SIDES
- INTERIOR WALL. 2x6 D.F. #2 STUDS @ 16" o/c w/ 5/8" TYPE 'X' GYP. BD. EA SIDE,SEPARATION WALL w/ R-19 INSULATION

NUMBERED NOTES

1. SHOWER AND BATHTUB COMPARTMENTS TO BE FINISHED WITH A NONABSORBENT FINISH. FINISH HEIGHT TO BE 6 FEET ABOVE FLOOR.
2. TEMPERED GLASS SHOWER ENCLOSURE w/ 22" MINIMUM SHOWER DOOR. CPC 408.5
3. 2x8 BLOCKING ALONG THE SHOWER AND TOILET FOR FUTURE GRAB BAR INSTALLATION, CRC 327.1.1
4. 40 GAL ELECTRIC W/H w/ HEAT PUMP PER T24 ENERGY CALCULATIONS
5. HANDRAILS, SEE 14/AD2
6. STAIRS, SEE 16/AD2
7. 22"x30" ATTIC ACCESS - SHALL BE WEATHER-STRIPPED TO PREVENT AIR LEAKAGE
8. CONCRETE LANDING, TO BE NO MORE THAN 7.75" BELOW THE DOOR THRESHOLD. CRC R311.3.1.

SQUARE FOOTAGE: UNIT 1-3

FIRST FLR:	636 SQ FT
SECOND FLR:	644 SQ FT
PORCH:	8 SQ FT

FIRST FLOOR PLAN

1/4" = 1'-0"

REV	DATE	DESCRIPTION	BY

DATE: 09/25/24

SCALE: As Noted

PREPARED BY:

PBPdrafting&design
pbpdrafting@aol.com

2924 Sierra St, Riverbank, CA 95367
Residence for Sammy Allatry
First Floor Plan

A1.1

PBPDRAFTING EXPRESSLY RESERVES IT'S COMMON LAW COPYRIGHT AND OTHER PROPERTY RIGHTS IN THESE PLANS. THEY MAY NOT BE REPRODUCED, CHANGED, COPIED, ASSIGNED TO ANY OR USED FOR OTHER THAN THAT INTENDED WITHOUT FIRST OBTAINING THE WRITTEN PERMISSION AND CONSENT BY DESIGNER

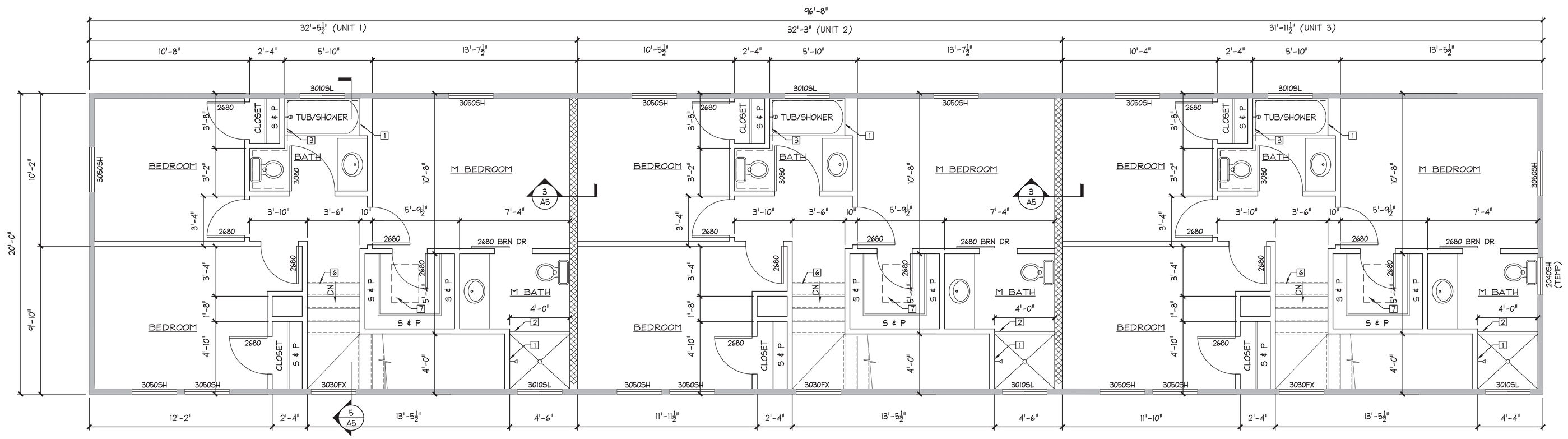

WALL LEGEND

EXTERIOR WALL. 2x4 D.F. #2 STUDS @ 16" o/c. w/ ½" GYP. BD. ON INSIDE w/ R-15 INSULATION. STUCCO @ EXTERIOR

INTERIOR WALL. 2x4 D.F. #2 STUDS @ 16" o/c. w/ ½" GYP. BD. BOTH SIDES

INTERIOR WALL. 2x6 D.F. #2 STUDS @ 16" o/c w/ 5/8" TYPE 'X' GYP. BD. EA SIDE,SEPARATION WALL w/ R-19 INSULATION

NUMBERED NOTES

1. SHOWER AND BATHTUB COMPARTMENTS TO BE FINISHED WITH A NONABSORBENT FINISH. FINISH HEIGHT TO BE 6 FEET ABOVE FLOOR.
2. TEMPERED GLASS SHOWER ENCLOSURE w/ 22" MINIMUM SHOWER DOOR. CPC 408.5
3. 2x8 BLOCKING ALONG THE SHOWER AND TOILET FOR FUTURE GRAB BAR INSTALLATION, CRC 327.1.1
4. 40 GAL ELECTRIC W/H w/ HEAT PUMP PER T24 ENERGY CALCULATIONS
5. HANDRAILS, SEE 14/AD2
6. STAIRS, SEE 16/AD2
7. 22"x30" ATTIC ACCESS - SHALL BE WEATHER-STRIPPED TO PREVENT AIR LEAKAGE
8. CONCRETE LANDING, TO BE NO MORE THAN 7.75" BELOW THE DOOR THRESHOLD. CRC R311.3.1.

SQUARE FOOTAGE: UNIT 1-3	
FIRST FLR:	636 SQ FT
SECOND FLR:	644 SQ FT

SECOND FLOOR PLAN

1/4" = 1'-0"

REV	DATE	DESCRIPTION	BY

DATE: 09/25/24

SCALE: As Noted

PREPARED BY:

PBPdrafting&design
pbpdrafting@aol.com

2924 Sierra St, Riverbank, CA 95367
Residence for Sammy Allatry

Second Floor Plan

A1.2

PBPdrafting EXPRESSLY RESERVES ITS COMMON LAW COPYRIGHT AND OTHER PROPERTY RIGHTS IN THESE PLANS. THEY MAY NOT BE REPRODUCED, CHANGED, COPIED, ASSIGNED TO ANY OR USED FOR OTHER THAN THAT INTENDED WITHOUT FIRST OBTAINING THE WRITTEN PERMISSION AND CONSENT BY DESIGNER

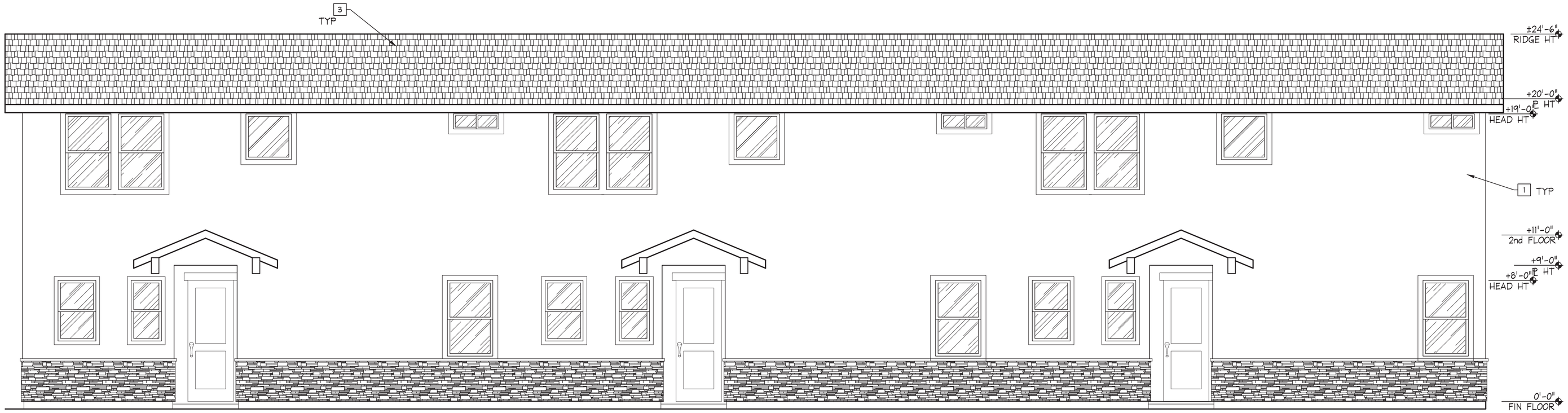

WEST ELEVATION

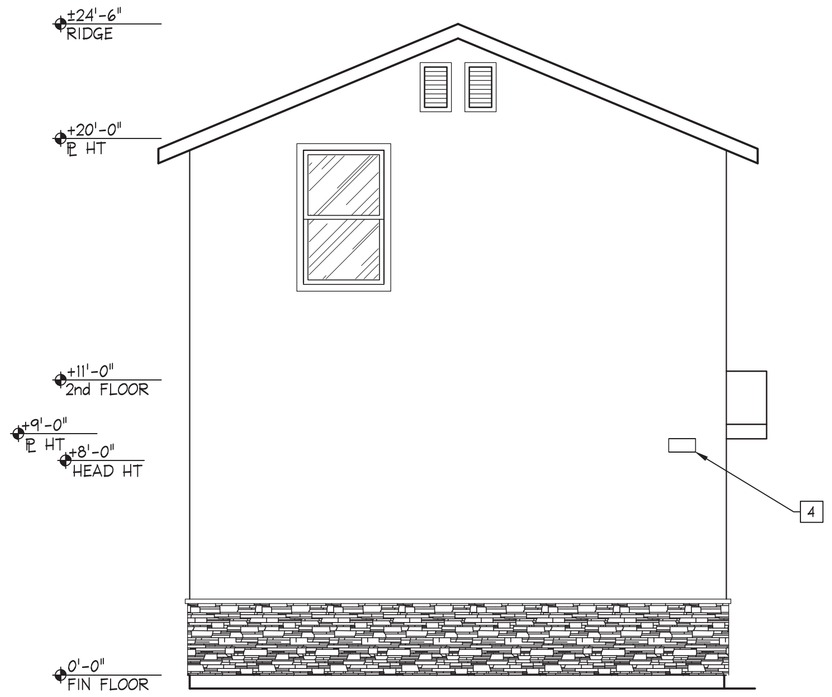

NORTH ELEVATION

KEY NOTES

1. 7/8" THICK 3 COAT STUCCO FINISH o/ METAL LATH, o/ 2 LAYERS GRADE D PAPER. CRC R703.6.2 & R703.6.3
2. WEEP SCREED - SEE 21/A5
3. COMPOSITION SHINGLES "COOL ROOF" o/ (2) LAYERS OF 15 LB FELT o/ PLYWOOD w/ RADIANT BARRIER
4. ADDRESS PLAQUE - ADDRESS NUMBERS SHALL BE MINIMUM 4 INCHES HIGH WITH A MINIMUM STROKE OF 1/2 INCH, AND SHALL CONTRAST WITH THEIR BACKGROUND.' CRC R319.1

EXTERIOR ELEVATIONS

1/4" = 1'-0"

REV	DATE	DESCRIPTION	BY

DATE: 09/25/24

SCALE: As Noted

PREPARED BY:
PBPdrafting&design
pbpdrafting@aol.com

2924 Sierra St, Riverbank, CA 95367
Residence for Sammy Allatry

Exterior Elevations

A2.1

PBPdrafting expressly reserves it's common law copyright and other property rights in these plans. They may not be reproduced, changed, copied, assigned to any or used for other than that intended without first obtaining the written permission and consent by designer

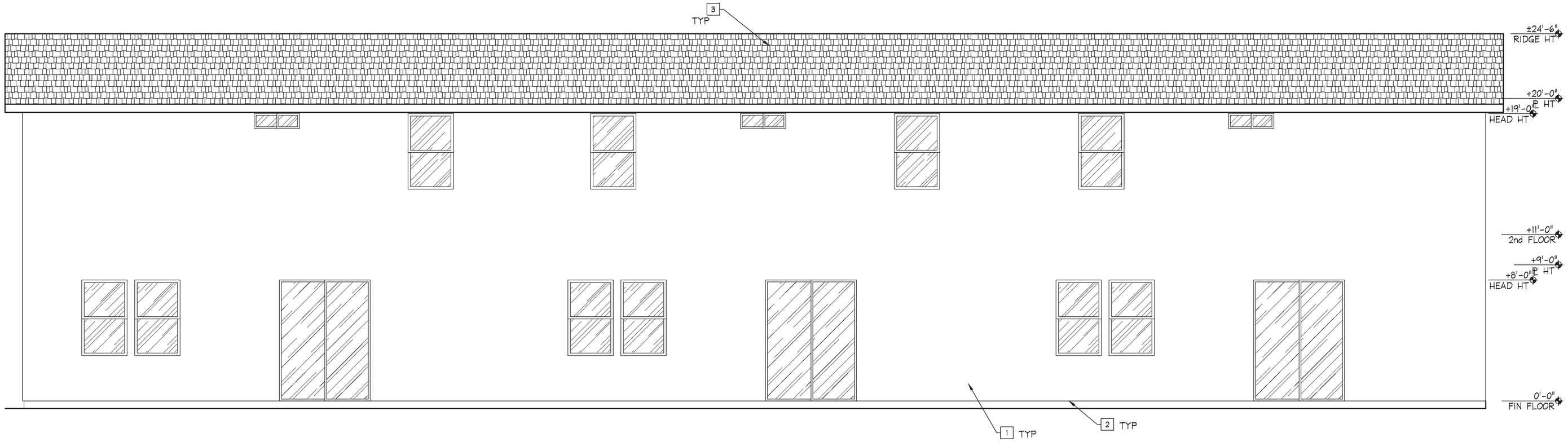

EAST ELEVATION

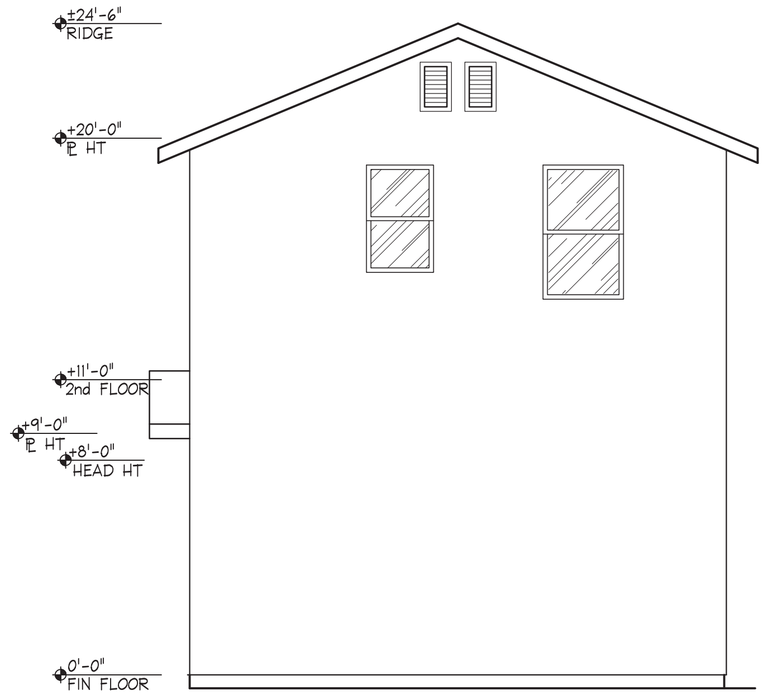

SOUTH ELEVATION

KEY NOTES

1. 7/8" THICK 3 COAT STUCCO FINISH o/ METAL LATH, o/ 2 LAYERS GRADE D PAPER. CRC R703.6.2 & R703.6.3
2. WEEP SCREED - SEE 21/A5
3. COMPOSITION SHINGLES "COOL ROOF" o/ (2) LAYERS OF 15 LB FELT o/ PLYWOOD w/ RADIANT BARRIER

EXTERIOR ELEVATIONS

1/4" = 1'-0"

REV	DATE	DESCRIPTION	BY

DATE: 04/25/24

SCALE: As Noted

PREPARED BY:
PBPdrafting&design
pbpdrafting@aol.com

2924 Sierra St, Riverbank, CA 95367
Residence for Sammy Allatry

Exterior Elevations

A2.2

PBPdrafting EXPRESSLY RESERVES IT'S COMMON LAW COPYRIGHT AND OTHER PROPERTY RIGHTS IN THESE PLANS. THEY MAY NOT BE REPRODUCED, CHANGED, COPIED, ASSIGNED TO ANY OR USED FOR OTHER THAN THAT INTENDED WITHOUT FIRST OBTAINING THE WRITTEN PERMISSION AND CONSENT BY DESIGNER

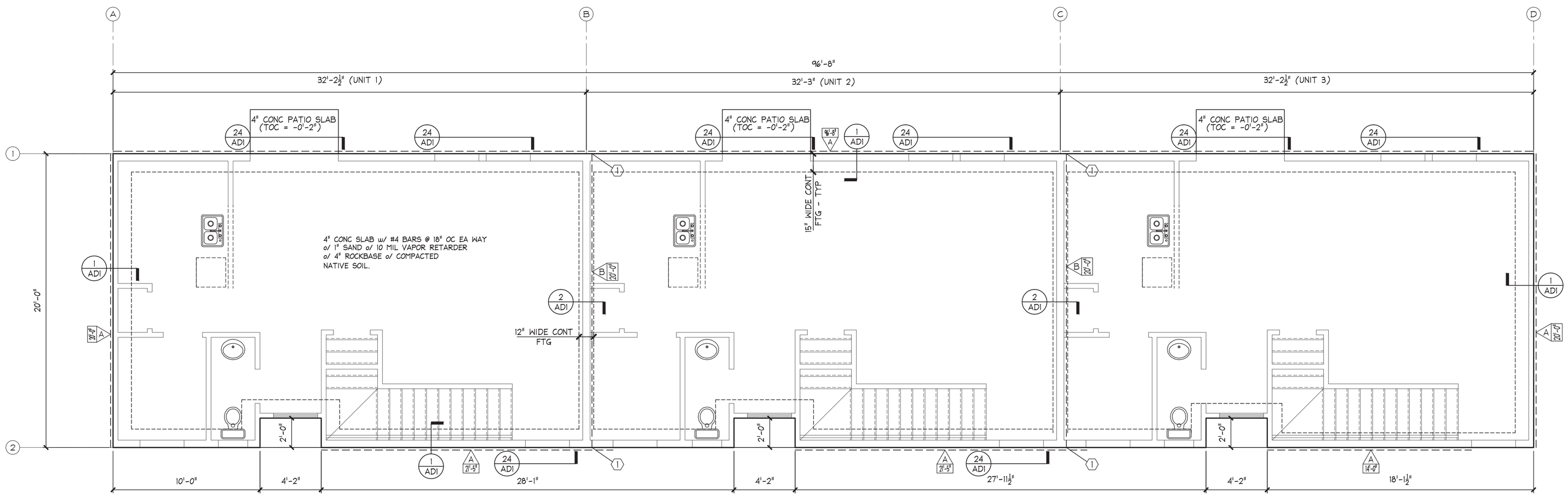

FOUNDATION NOTES

1. FINISH GRADE SHALL PROVIDE POSITIVE DRAINAGE AWAY FROM RESIDENCE.
2. ALL HARDWARE SHALL BE "SIMPSON" OR EQUAL CONNECTIONS & INSTALLED PER MFG.'S INSTRUCTIONS.
3. ANCHOR BOLTS SHALL BE ½"ϕ AB @ 72" OC (UON) w/ 3"x3"x.229" MIN WASHER ℄ @ EA BOLT, SEE A/S3.1. PROVIDE (2) BOLTS MIN PER PLATE, & @ 12" MAX FROM EACH END & SPLICE. SEE SCHEDULE FOR REQUIRED SPACING @ SHEARWALL LOCATIONS.
4. ALL HOLDDOWNS & OTHER FOUNDATION HARDWARE SHALL BE INSTALLED AT FOUNDATION INSPECTION.
5. ALL ANGLES OTHER THAN 90° SHALL BE 45° (UON).
6. 2x4 RECESSED PTDF NAILER @ ALL EXTERIOR DOORS.
7. ALL WOOD IN CONTACT WITH CONCRETE SHALL BE PT DF.
8. WELL GRADED MIX OF CEMENT, SAND, 1" MAX AGGREGATE w/ 4" MAX SLUMP. STRENGTH SHALL BE MIN. OF 2500 PSI @ 28 DAYS. USE (5) SACKS OF CEMENT MIN. PER YARD w/ WATER TO CEMENT RATIO OF 0.45

LEGEND

DENOTES SHEAR WALLS.

SHEAR WALL SCHEDULE

TYPE	SHTG	FOUND BASE ANCHOR	EDGE FSTNR	FIELD FSTNR	SHTG FASTENER	COMMENTS
A	⅜" CDX OR APA APPROVED ⅜" OSB	½"ϕ AB x 10" @ 32" OC	6" OC	12" OC	8d COMMON NAILS	
B	⅜" CDX OR APA APPROVED ⅜" OSB	½"ϕ AB x 10" @ 24" OC	4" OC	12" OC	8d COMMON NAILS	

FOUNDATION PLAN

1/4" = 1'-0"

REV	DATE	DESCRIPTION	BY

DATE: 09/25/24

SCALE: As Noted

PBPdrafting@design
pbpdrafting@aol.com

PREPARED BY REGISTERED PROFESSIONAL ENGINEER
S. CLARK SEAMAN
10-19-24
No. C59878
EXP. 12-31-25
CIVIL
STATE OF CALIFORNIA

2924 Sierra St, Riverbank, CA 95367
Residence for Sammy Allatry

Foundation Plan

A3

PBPDRAFTING EXPRESSLY RESERVES ITS COMMON LAW COPYRIGHT AND OTHER PROPERTY RIGHTS IN THESE PLANS. THEY MAY NOT BE REPRODUCED, CHANGED, COPIED, ASSIGNED TO ANY OR USED FOR OTHER THAN THAT INTENDED WITHOUT FIRST OBTAINING THE WRITTEN PERMISSION AND CONSENT BY DESIGNER

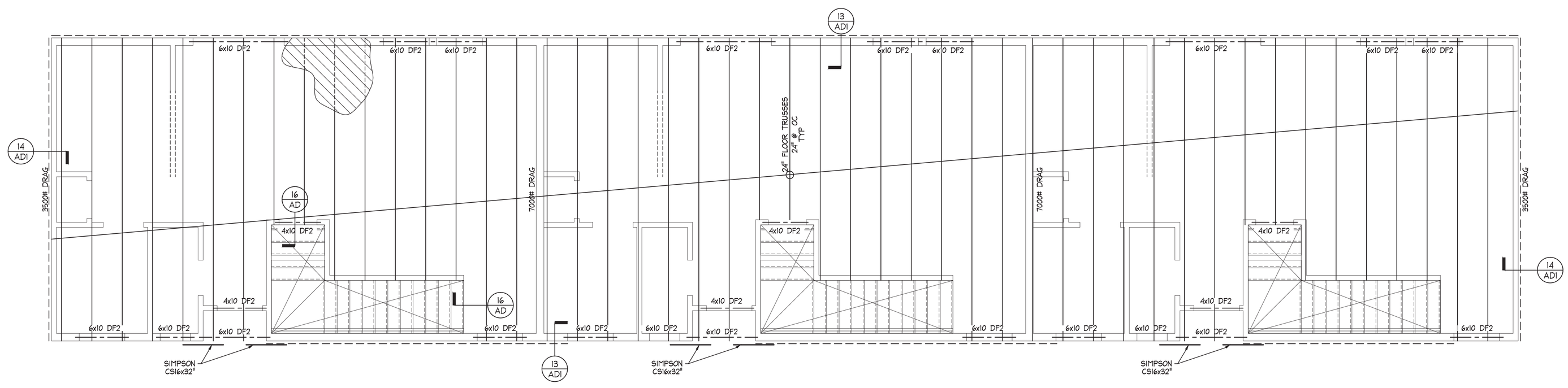

LEGEND

A — DENOTES SHEAR WALLS.

DENOTES HEADER

NOTES

1. FLOOR SHEATHING: $1\frac{1}{8}$" APA RATED STURD-I-FLOOR T&G w/ 32" PANEL INDEX, EXP 1
   NAILING: 10d EDGE: 6" OC
   FIELD: 12" OC
   STAGGER PANEL JOINTS, GLUE & NAIL
2. SEE 9/AD1 FOR FRAMED OPNGS
3. DBL TOP @ SPLICE PER 8/AD

SHEAR WALL SCHEDULE

TYPE	SHTG	FOUND BASE ANCHOR	EDGE FSTNR	FIELD FSTNR	SHTG FASTENER	COMMENTS
A	$\frac{3}{8}$" CDX OR APA APPROVED $\frac{3}{8}$" OSB	$\frac{1}{2}$"ϕ AB x 10" @ 32" OC	6" OC	12" OC	8d COMMON NAILS	

FLOOR FRAMING PLAN

1/4" = 1'-0"

REV	DATE	DESCRIPTION	BY

DATE: 09/25/24

SCALE: As Noted

PBPdrafting&design
pbpdrafting@aol.com

PREPARED BY REGISTERED PROFESSIONAL ENGINEER
S. MARK SEAMAN
10-19-24
No. C59878
EXP. 12-31-25
CIVIL
STATE OF CALIFORNIA

2924 Sierra St, Riverbank, CA 95367
Residence for Sammy Allatry

Second Floor Framing Plan

A4.1

PBPDRAFTING EXPRESSLY RESERVES IT'S COMMON LAW COPYRIGHT AND OTHER PROPERTY RIGHTS IN THESE PLANS. THEY MAY NOT BE REPRODUCED, CHANGED, COPIED, ASSIGNED TO ANY OR USED FOR OTHER THAN THAT INTENDED WITHOUT FIRST OBTAINING THE WRITTEN PERMISSION AND CONSENT BY DESIGNER

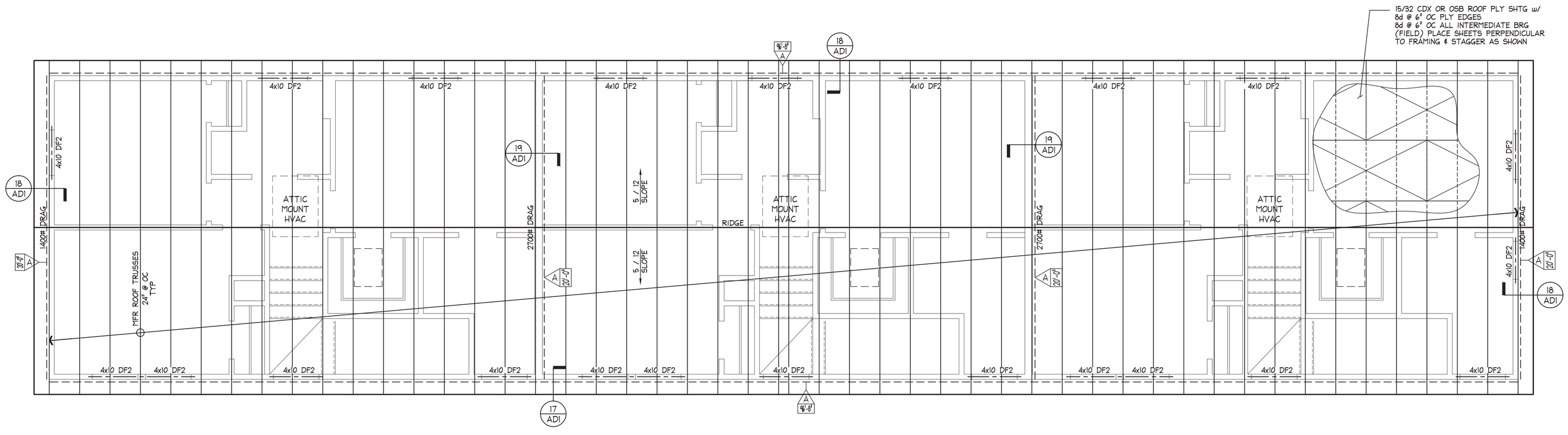

NOTES:

1. FOR THE EXACT ROOF TRUSS LAYOUT, REFER TO THE TRUSS MANUFACTURER'S DRAWINGS.
2. SEE 7/AD FOR FRAMED OPNGS
3. DBL TOP ℄ SPLICE PER 11/AD

EAVE VENTS - 16 x .54 SQ FT = 8.64 SQ FT

ATTIC VENT CACULATIONS
VENTILATION REQUIRED - TOTAL SQ. FT. 1993 / 150 = 13.3 SQ. FT.
ROOF LOUVER VENTS - 15"Ø = 1 SQ FT PROVIDED - 8 x 1 SQ FT = 8 SQ FT
GABLE WALL VENT - 12" x 18" = 1.5 SQ FT PROVIDED - 5 x 1.5 SQ FT = 7.5 SQ FT
TOTAL PROVIDED = 15.5 SQ FT > 13.3 SQ FT

LEGEND

A — DENOTES SHEAR WALLS.

— - — DENOTES HEADER

SHEAR WALL SCHEDULE

TYPE	SHTG	FOUND BASE ANCHOR	EDGE FSTNR	FIELD FSTNR	SHTG FASTENER	COMMENTS
A	3/8" CDX OR APA APPROVED 3/8" OSB	1/2"Ø AB x 10" @ 32" OC	6" OC	12" OC	8d COMMON NAILS	

ROOF FRAMING PLAN

1/4" = 1'-0"

REV	DATE	DESCRIPTION	BY

DATE: 09/25/24

SCALE: As Noted

PBPdrafting&design
pbpdrafting@aol.com

REGISTERED PROFESSIONAL ENGINEER
S. CLARK SEAMAN
10-19-24
No. C59878
EXP. 12-31-25
CIVIL
STATE OF CALIFORNIA

2924 Sierra St, Riverbank, CA 95367
Residence for Sammy Allatry

Roof Framing Plan

A4.2

PBPdrafting EXPRESSLY RESERVES IT'S COMMON LAW COPYRIGHT AND OTHER PROPERTY RIGHTS IN THESE PLANS. THEY MAY NOT BE REPRODUCED, CHANGED, COPIED, ASSIGNED TO ANY OR USED FOR OTHER THAN THAT INTENDED WITHOUT FIRST OBTAINING THE WRITTEN PERMISSION AND CONSENT BY DESIGNER

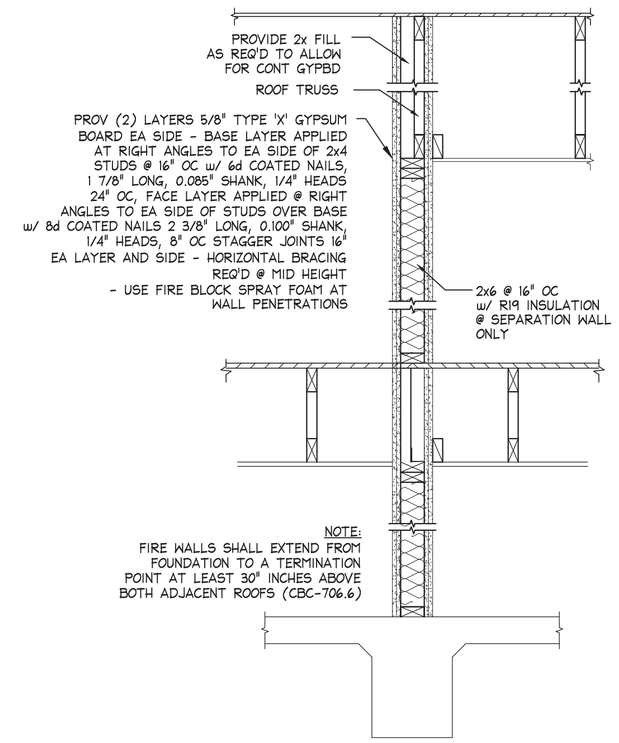

3 1 HR FIRE WALL
@ PARTY WALL 3/4" = 1'-0"

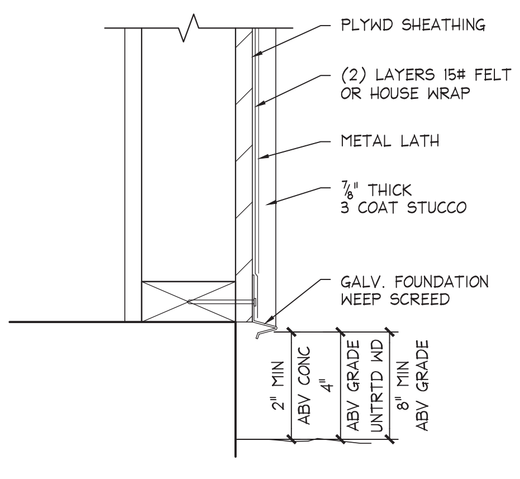

21 WEEP SCREED
3" = 1'-0"

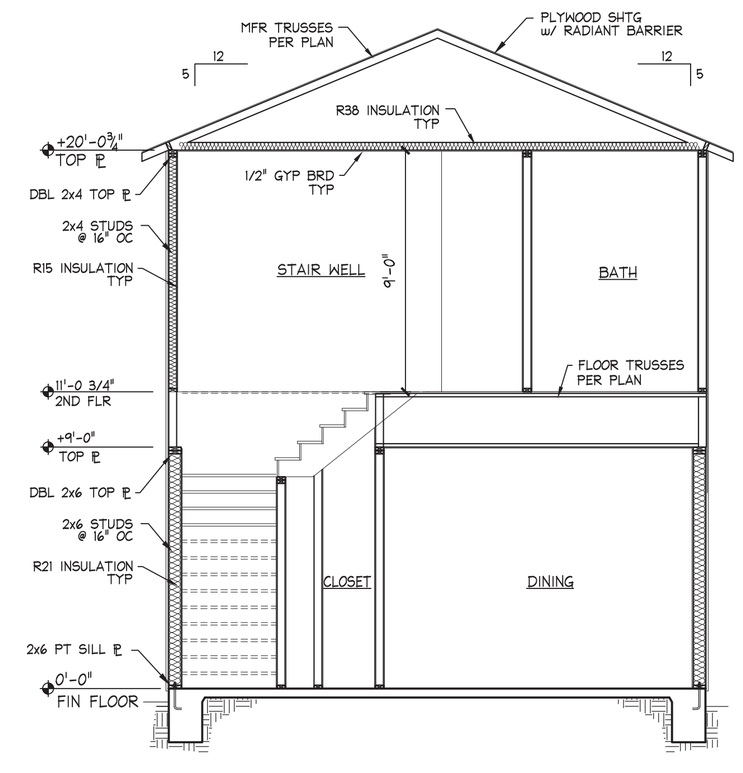

5 CROSS SECTION
1/4" = 1'-0"

REV	DATE	DESCRIPTION	BY

DATE: 09/25/24

SCALE: As Noted

PREPARED BY:
PBPdrafting@design
pbpdrafting@aol.com

2924 Sierra St, Riverbank, CA 95367
Residence for Sammy Allatry

Cross Sections

A5

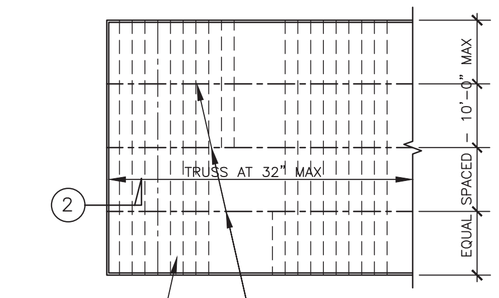

PROVIDE PLY SHTG ATTACHED DIRECTLY TO TOP OF THE TRUSS TOP CHORD (NOT SHOWN)

2x4 CONT BRIDGING ON TOP OF BOT CHORD OF TRUSS W/ 2–16d TO EA TRUSS BOT CHORD & 3–16d TO BOT CHORD OR LEDGER @ END (AT BRIDGING SPLICE PROVIDE 2x4 x 3'–0" SPLICE BLK W/ 5–16d EA SIDE OF SPLICE OR "SIMPSON" ST22 STRAP EA SPLICE)

FRAMING PLAN

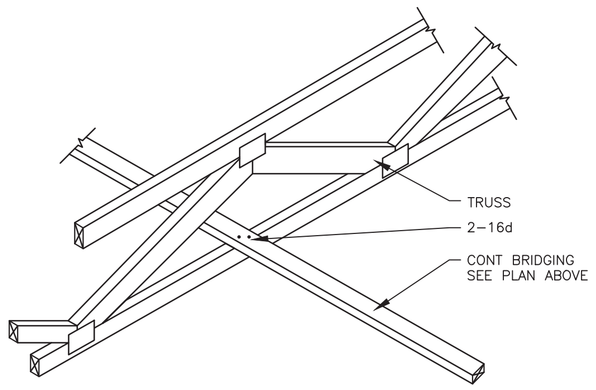

1 CONNECTION OF BRIDGING

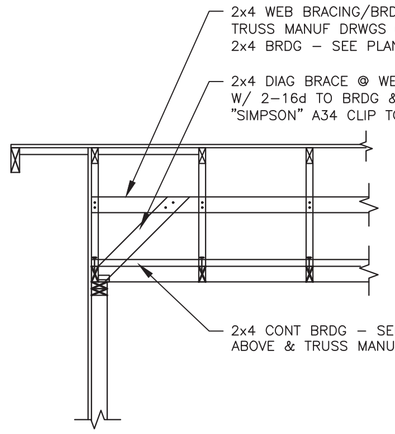

2 SECTION

14 TYP TRUSS BRIDGING

N.T.S.

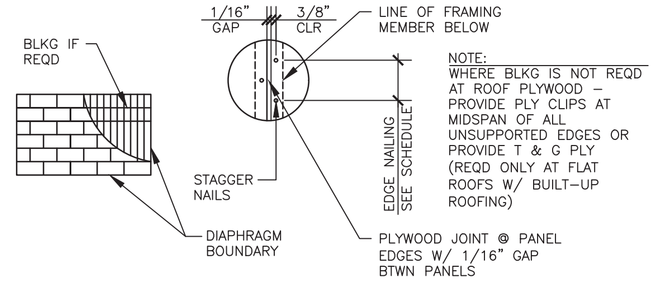

NOTE:
WHERE BLKG IS NOT REQD AT ROOF PLYWOOD – PROVIDE PLY CLIPS AT MIDSPAN OF ALL UNSUPPORTED EDGES OR PROVIDE T & G PLY (REQD ONLY AT FLAT ROOFS W/ BUILT–UP ROOFING)

PLYWOOD PANEL SCHEDULE

TYPE	PANEL DESIGNATION	EDGE NAILING	NAILING @ INTERM	BLKG
ROOF	1/2" CDX (OPT: 15/32" OSB)	8d @ 6"	8d @ 12"	——
				——

1 ALL NAILS SHALL BE COMMON WIRE NAILS

2 ALL PLYWOOD MUST BE MARKED "APA W/ EXT GLUE"

3 PROVIDE EDGE NAILING ALONG ALL STRUT & CHORD LINES

4 PREDRILL HOLES WHERE PLYWOOD TENDS TO SPLIT

5 MIN INDIVIDUAL PIECE: 8 SQ FT – LEAST DIMENSION = 2'–0"

6 ALL FLOOR PLYWOOD IS TO BE NAILED AND GLUED TO ALL FLOOR FRAMING

12 PLYWOOD SHEATHING

N.T.S.

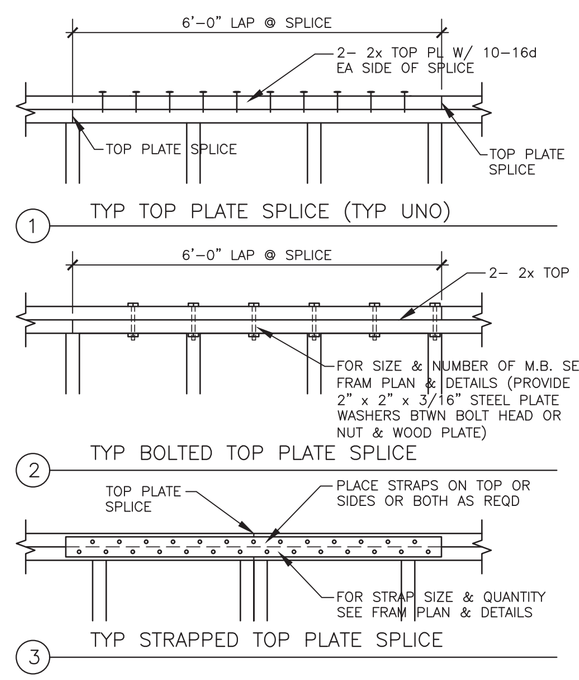

1 TYP TOP PLATE SPLICE (TYP UNO)

2 TYP BOLTED TOP PLATE SPLICE

3 TYP STRAPPED TOP PLATE SPLICE

11 TYP TOP PLATE SPLICE

N.T.S.

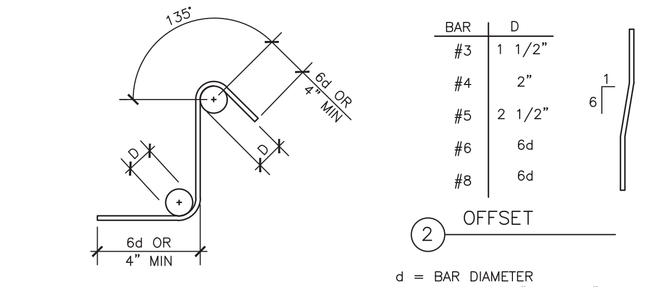

1 STIRRUPS & TIES

BAR	D
#3	1 1/2"
#4	2"
#5	2 1/2"
#6	6d
#8	6d

2 OFFSET

d = BAR DIAMETER
D = 6d = FOR #3 THRU #8
D = 8d = FOR #9 THRU #11

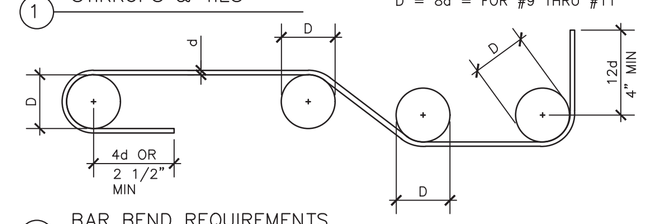

3 BAR BEND REQUIREMENTS

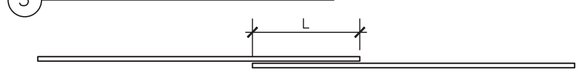

4 LAP DETAIL

L= 48 DIA (2'–0" MIN) WHICH EVER IS GREATER

6 TYP REINFORCING DETAILS

N.T.S.

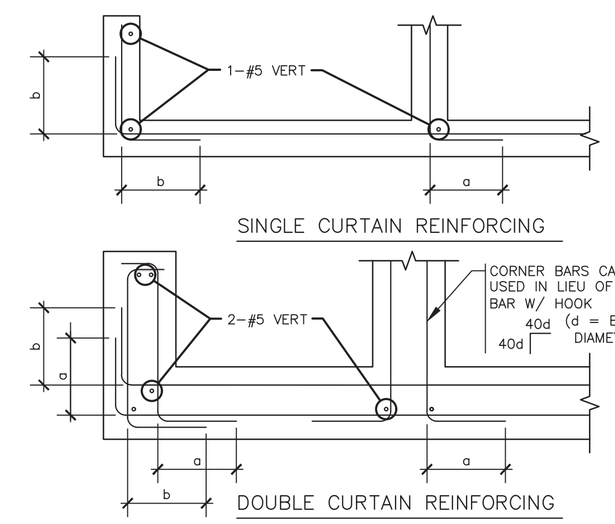

BAR SIZE		#4	#5	#6	#7	#8	#9
GRADE 40	a	1'–0"	1'–0"	1'–4"	1'–10"	2'–5"	3'–0"
	b	1'–9"	1'–9"	2'–4"	3'–2"	4'–2"	5'–2"
GRADE 60	a	1'–0"	1'–5"	2'–0"	2'–9"	3'–7"	4'–6"
	b	1'–9"	2'–6"	3'–6"	4'–9"	6'–2"	7'–8"

5 PLAN @ TYP FTG REINF

N.T.S.

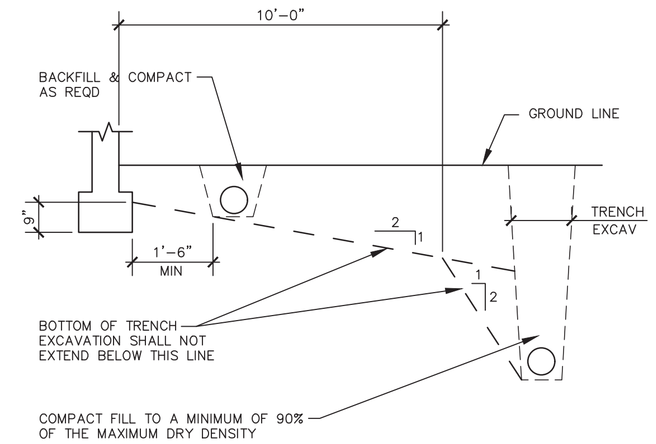

NOTE: THE CONTRACTOR SHALL COORDINATE ALL EXCAVATION OPERATIONS WITH BUILDING FOUNDATION REQUIREMENTS

COORDINATE ALL BACKFILL AND TRENCH EXCAVATIONS WITH THE SOILS REPORT OR COMPACTION REQUIREMENTS OF THE GENERAL STRUCTURAL NOTES

3 EXCAVATION

PARALLEL TO FOOTING

N.T.S.

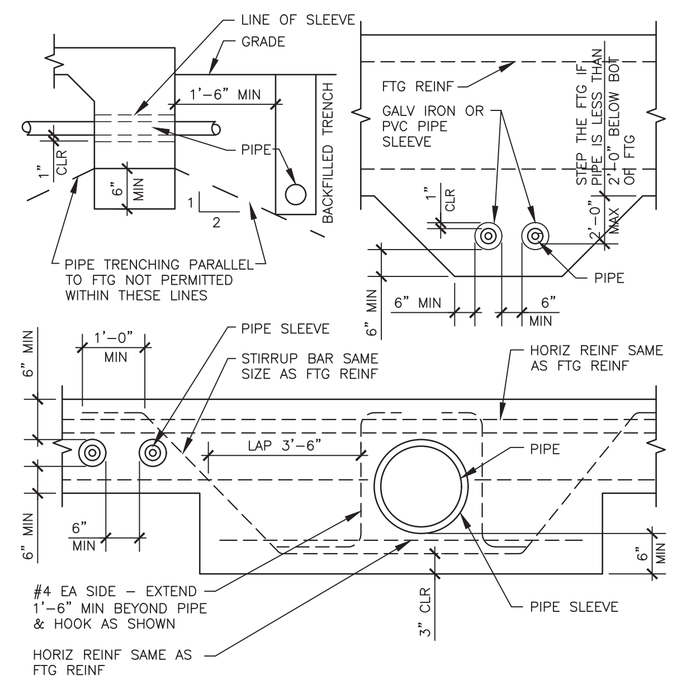

2 PIPE EXCLUSION DETAILS

N.T.S.

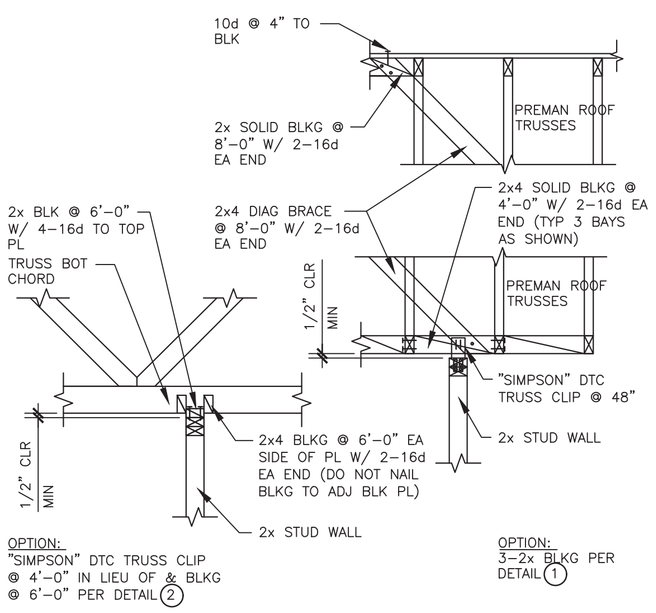

1 PERPENDICULAR TO TRUSS

2 PARALLEL TO TRUSS

13 TYPICAL NON–BEARING WALL

N.T.S.

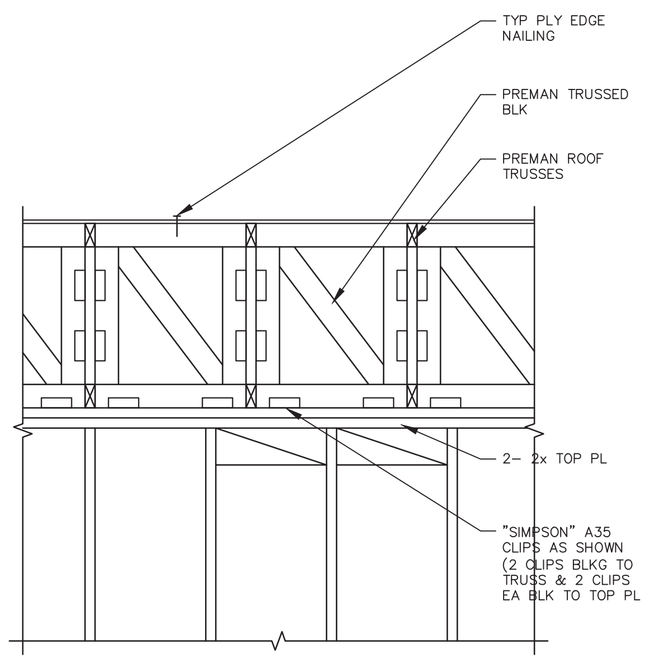

10 SECTION @ ROOF FRMG

N.T.S.

NOTE: DELETE SEALANT & GROOVE IN AREAS TO RECEIVE VINYL OR TILE FLOOR COVERING

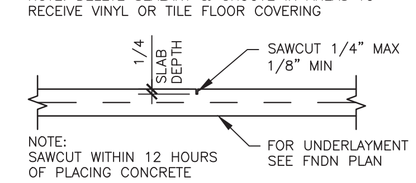

NOTE:
SAWCUT WITHIN 12 HOURS OF PLACING CONCRETE

1 CRACK CONTROL JOINT

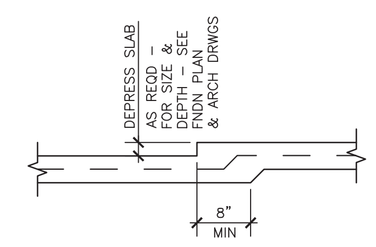

2 DEPRESSED SLAB

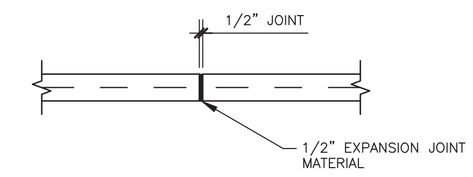

3 EXP JOINT AT EXTERIOR SLABS ONLY

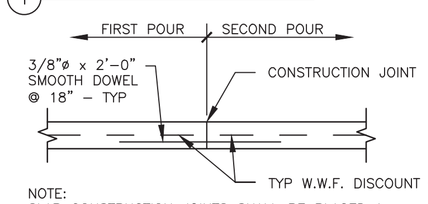

NOTE:
SLAB CONSTRUCTION JOINTS SHALL BE PLACED A MAX OF 20' ON CENTER EA WAY. CONTROL JOINTS SHALL BE LOCATED BTWN CONSTR JOINTS SUCH THAT A MAX DISTANCE BTWN JOINTS IS 9'. EACH SEGMENT SHALL BE APPROXIMATELY SQUARE W/ THE LENGTH NOT MORE THAN 1.5 TIMES THE WIDTH. POUR ALTERNATE PANELS IN CHECKERBOARD FASHION W/ MIN 2 DAY DELAY BTWN POURING ADJ SLAB PANELS.

4 CONSTRUCTION JOINT

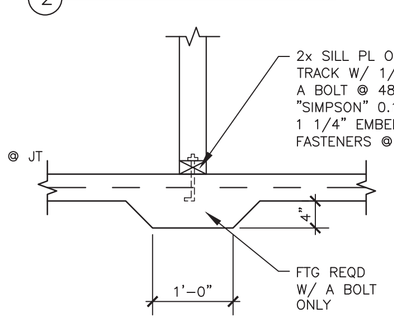

5 NON–BEARING FOOTING

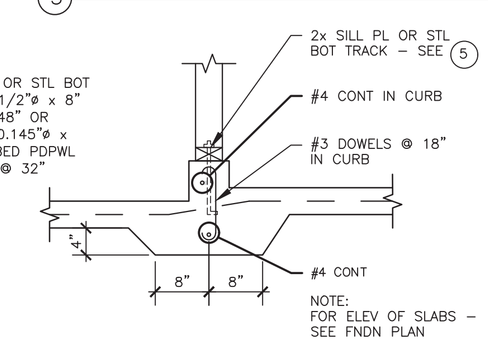

NOTE:
FOR ELEV OF SLABS – SEE FNDN PLAN

6 FOOTING AT CURB & STEP

4 TYPICAL SLAB DETAILS

N.T.S.

REV	DATE	DESCRIPTION	BY

DATE: 09/25/24

SCALE: As Noted

PREPARED BY:

PBPdrafting&design
pbpdrafting@aol.com

2924 Sierra St, Riverbank, CA 95367
Residence for Sammy Allatry

Details

AD

PBPDRAFTING EXPRESSLY RESERVES IT'S COMMON LAW COPYRIGHT AND OTHER PROPERTY RIGHTS IN THESE PLANS. THEY MAY NOT BE REPRODUCED, CHANGED, COPIED, ASSIGNED TO ANY OR USED FOR OTHER THAN THAT INTENDED WITHOUT FIRST OBTAINING THE WRITTEN PERMISSION AND CONSENT BY DESIGNER

PBPDRAFTING EXPRESSLY RESERVES IT'S COMMON LAW COPYRIGHT AND OTHER PROPERTY RIGHTS IN THESE PLANS. THEY MAY NOT BE REPRODUCED, CHANGED, COPIED, ASSIGNED TO ANY OR USED FOR OTHER THAN THAT INTENDED WITHOUT FIRST OBTAINING THE WRITTEN PERMISSION AND CONSENT BY DESIGNER

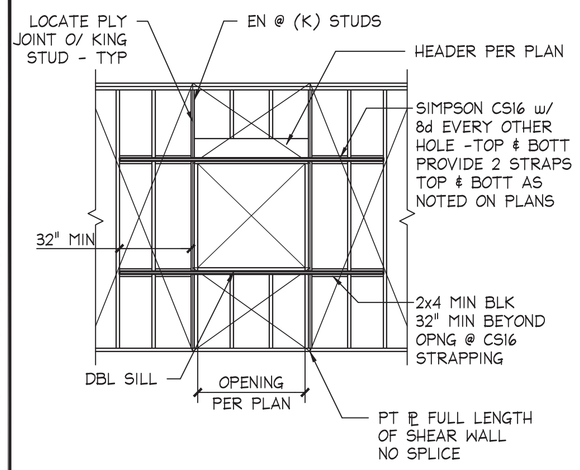

24 SPECIAL SHEAR WALL
NTS

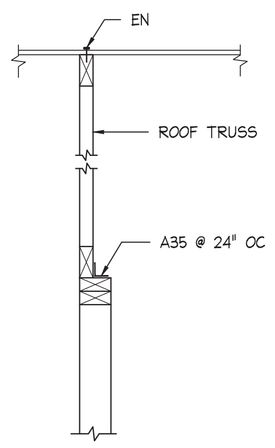

19 SHEAR TRANSFER
1" = 1'-0"

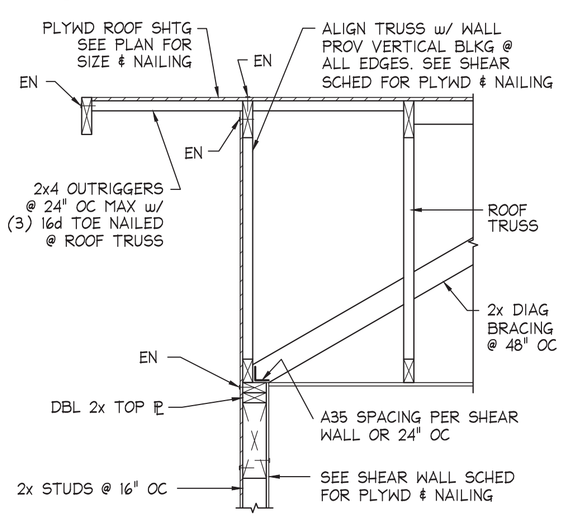

18 FRAMING DETAIL
3/4" = 1'-0"

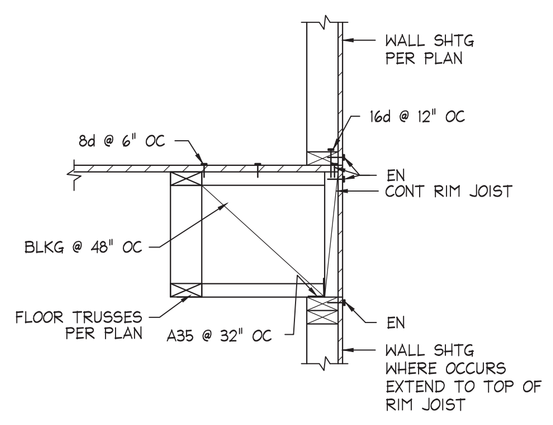

14 FRAMING DETAIL
@ PARALLEL 1" = 1'-0"

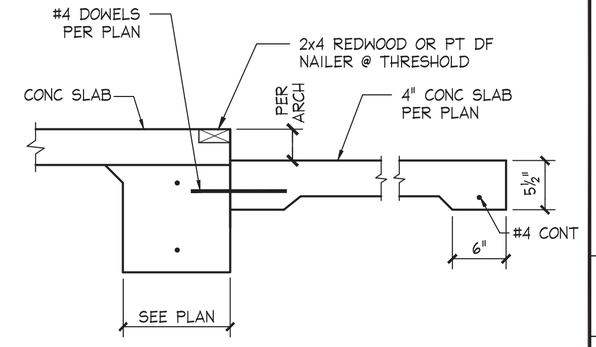

NOTE:
SEE 1/AD1 UON

4 FOOTING
@ SLEEPER 1" = 1'-0"

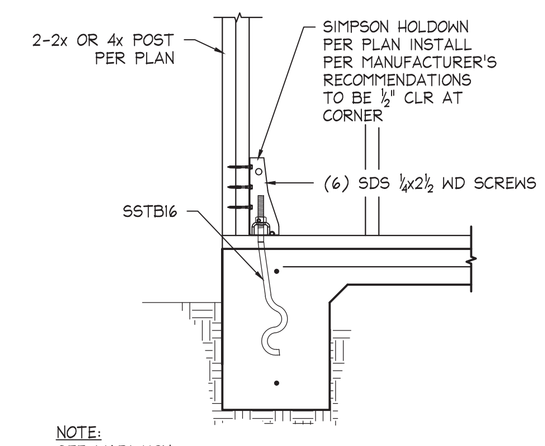

NOTE:
SEE 1/AD1 UON

3 HDU2 HOLDOWN
1" = 1'-0"

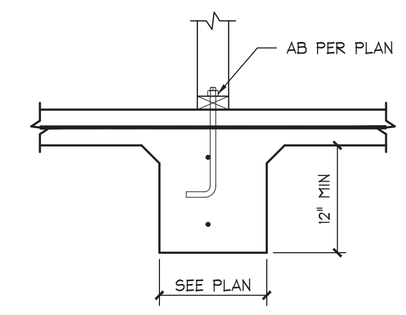

NOTE:
SEE 1/AD1 UON

2 INTERIOR FOOTING
1" = 1'-0"

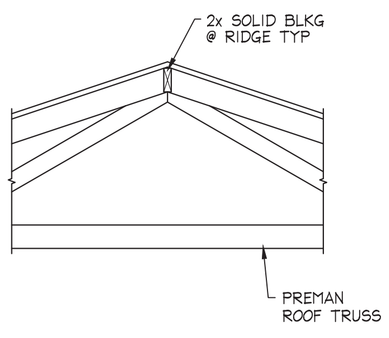

21 FRAMING DETAIL
3/4" = 1'-0"

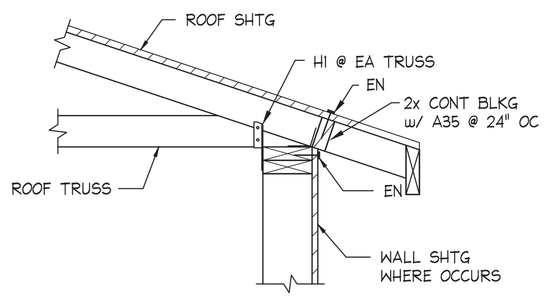

17 LOW EAVE
1" = 1'-0"

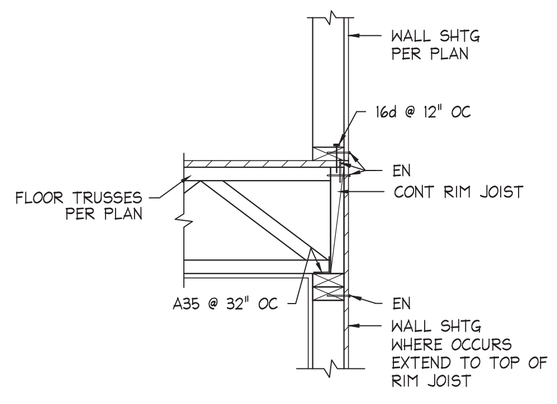

13 FRAMING DETAIL
@ PERPENDICULAR 1" = 1'-0"

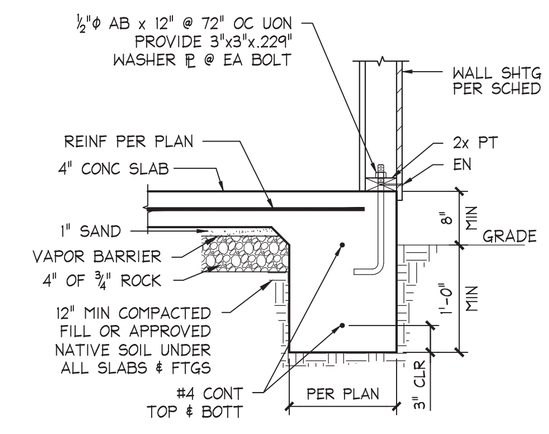

1 PERIMETER FOOTING
1" = 1'-0"

REV	DATE	DESCRIPTION	BY

DATE: 09/25/24
SCALE: As Noted

PBPdrafting@design
pbpdrafting@aol.com

PREPARED BY REGISTERED PROFESSIONAL ENGINEER
S. CLARK SEAMAN
10-19-24
No. C59878
EXP. 12-31-25
CIVIL
STATE OF CALIFORNIA

2924 Sierra St, Riverbank, CA 95367
Residence for Sammy Allatry

Details

AD1

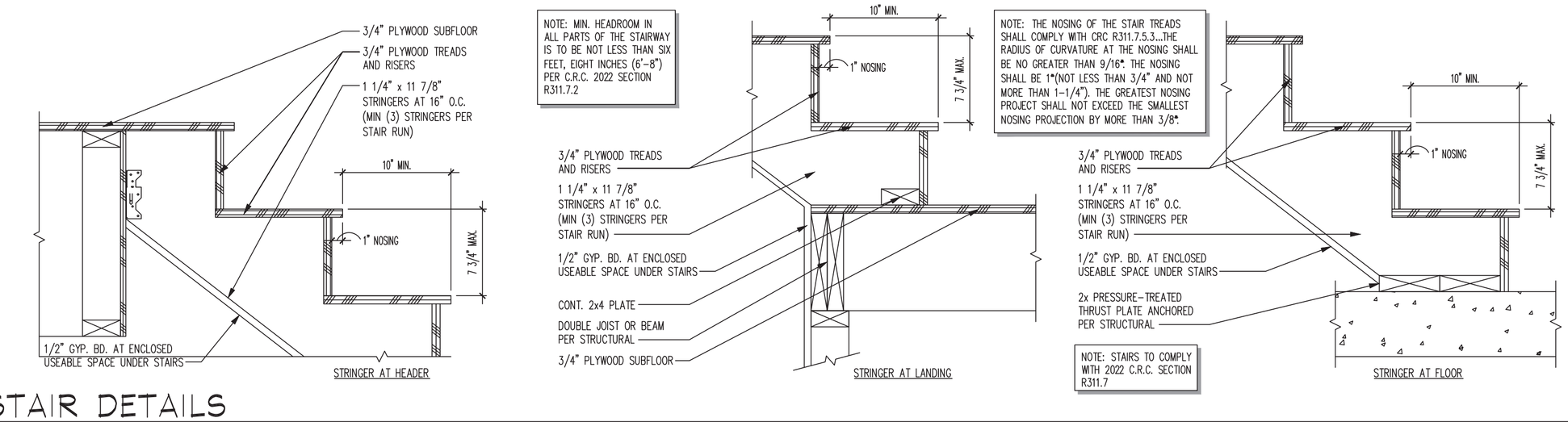

16 STAIR DETAILS

SCALE: 1 1/2" = 1'-0"

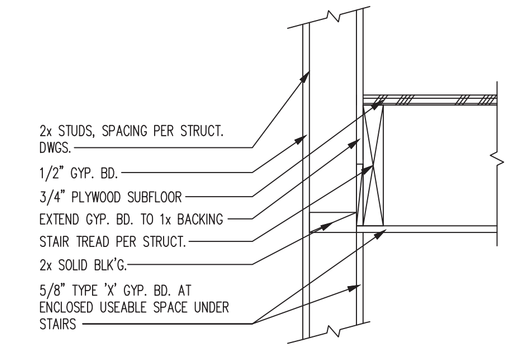

2 STRINGER AT WALLS

SCALE: 1 1/2" = 1'-0"

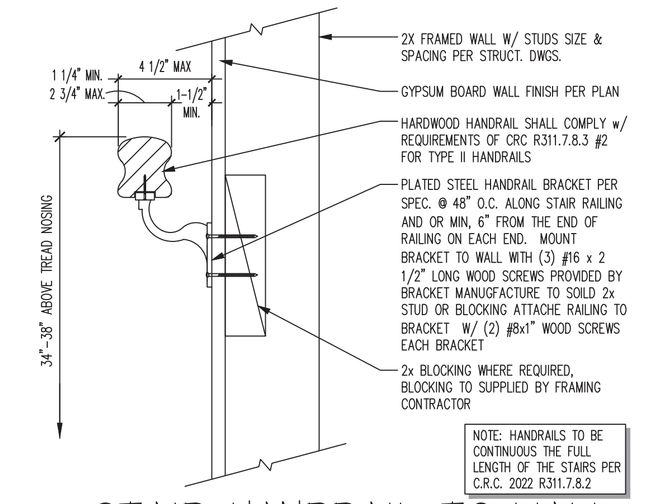

1 STAIR HANDRAIL TO WALL

SCALE: 3" = 1'-0"

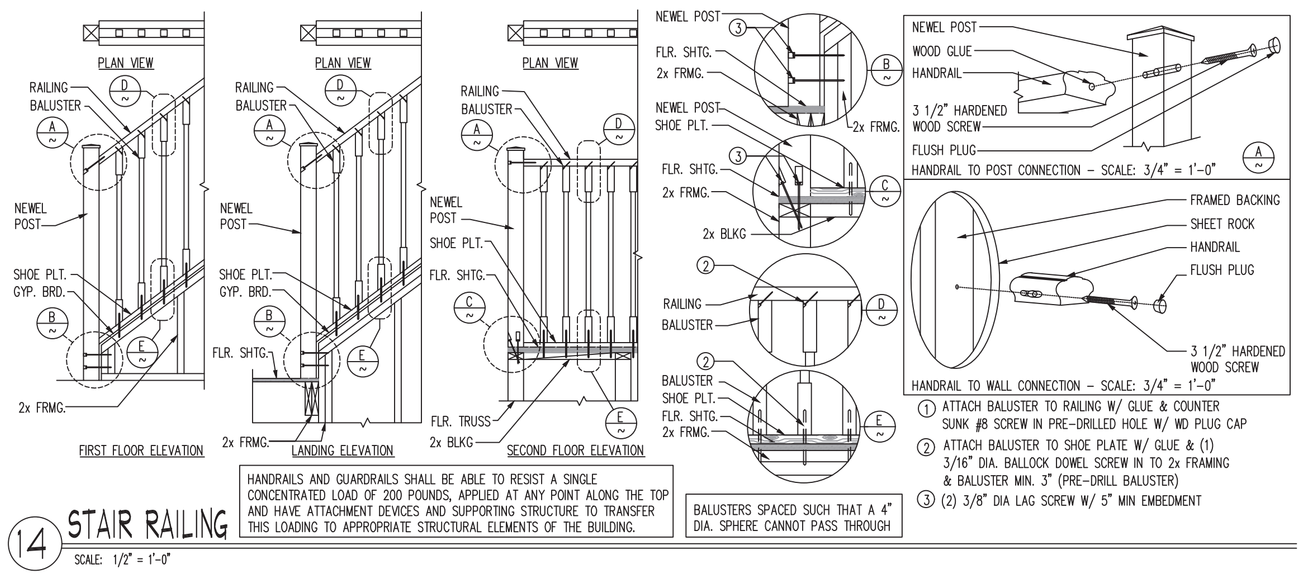

① ATTACH BALUSTER TO RAILING W/ GLUE & COUNTER SUNK #8 SCREW IN PRE-DRILLED HOLE W/ WD PLUG CAP
② ATTACH BALUSTER TO SHOE PLATE W/ GLUE & (1) 3/16" DIA. BALLOCK DOWEL SCREW IN TO 2x FRAMING & BALUSTER MIN. 3" (PRE-DRILL BALUSTER)
③ (2) 3/8" DIA LAG SCREW W/ 5" MIN EMBEDMENT

14 STAIR RAILING

SCALE: 1/2" = 1'-0"

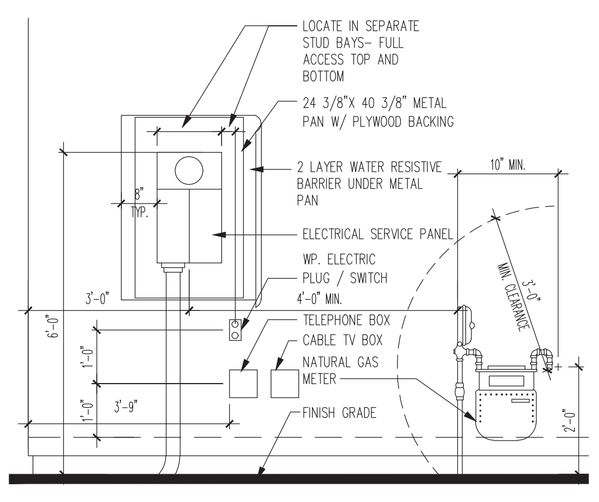

5 MINIMUM UTILITY SERVICE REQUIREMENTS

SCALE: 1/2" = 1'-0"

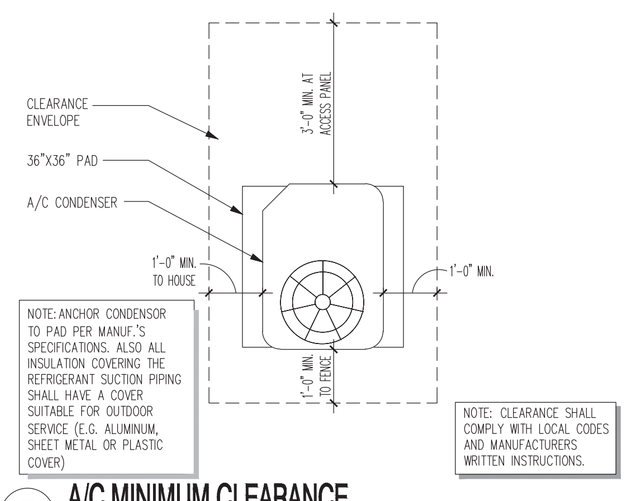

7 A/C MINIMUM CLEARANCE

SCALE: 1/2" = 1'-0"

DETAIL INDICATES 5 TON - 12 SEER UNIT (39"H x 37"D X 27"W)

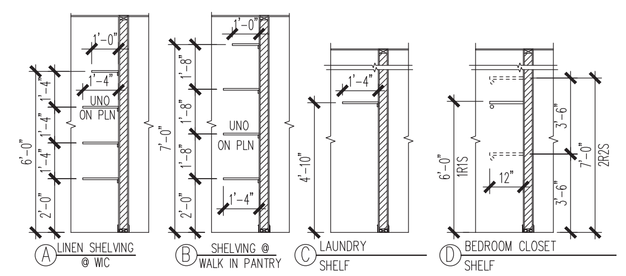

8 TYPICAL SHELVING HEIGHTS

SCALE: 1/4" = 1'-0"

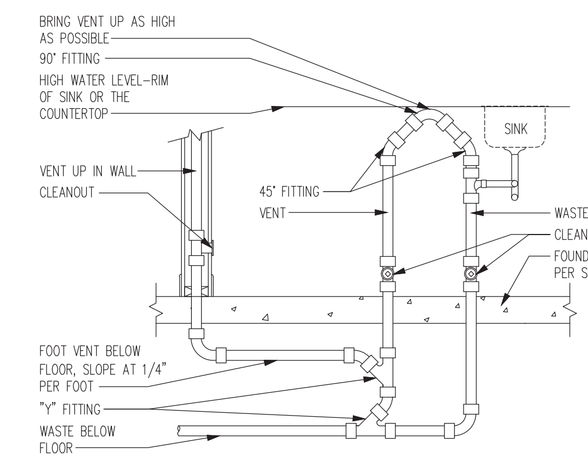

9 BOSTON LOOP

SCALE: 3/4" = 1'-0"

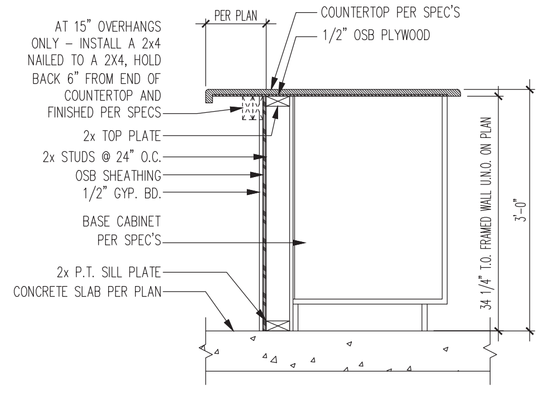

11 COUNTER OVERHANG

SCALE: 3/4" = 1'-0"

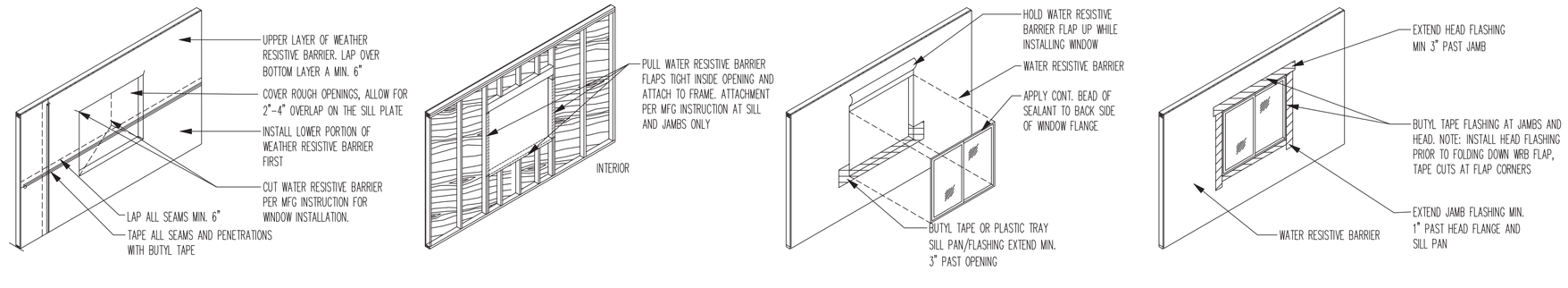

12 WINDOW FLASHING - TYPICAL

SCALE: 3/4" = 1'-0"

REV	DATE	DESCRIPTION	BY

DATE: 09/25/24

SCALE: As Noted

PREPARED BY:

PBPdrafting@design
pbpdrafting@aol.com

2924 Sierra St, Riverbank, CA 95367
Residence for Sammy Allatry

Details

AD2

PBPDRAFTING EXPRESSLY RESERVES ITS COMMON LAW COPYRIGHT AND OTHER PROPERTY RIGHTS IN THESE PLANS. THEY MAY NOT BE REPRODUCED, CHANGED, COPIED, ASSIGNED TO ANY OR USED FOR OTHER THAN THAT INTENDED WITHOUT FIRST OBTAINING THE WRITTEN PERMISSION AND CONSENT BY DESIGNER

PBPdrafting EXPRESSLY RESERVES IT'S COMMON LAW COPYRIGHT AND OTHER PROPERTY RIGHTS IN THESE PLANS. THEY MAY NOT BE REPRODUCED, CHANGED, COPIED, ASSIGNED TO ANY OR USED FOR OTHER THAN THAT INTENDED WITHOUT FIRST OBTAINING THE KRITTEN PERMISSION AND CONSENT BY DESIGNER

LEGEND

- SINGLE POLE SWITCH
- 3 THREE POLE SWITCH
- D DIMMER SWITCH
- V VACANCY SENSOR SWITCH
- DUPLEX CONVENIENCE OUTLET, 120V
- FOURPLEX CONVENIENCE OUTLET, 120V
- WP/GFI WEATHER PROOF/ GROUND FAULT INTERUPTER
- 1/2 SWITCHED, 120V
- EV ELECTRONIC VEHICLE RACEWAY
- 220V OUTLET, 220V
- DOOR BELL 48" MAX ABOVE FINISH FLOOR
- SURFACE MOUNTED CEILING LIGHT
- WALL HUNG FIXTURE
- P WALL HUNG FIXTURE w/ PHOTOCELL/ MOTION SENSOR
- HANGING CEILING LIGHT
- RECESSED CEILING LED LIGHT
- DR RECESSED CEILING LED LIGHT (DAMP/WET RATED)
- LED LIGHT FIXTURE
- CEILING FAN/LIGHT
- ELECTRICAL PANEL
- EXHAUST FAN (50 CFM MIN)
- WHOLE HOUSE FAN 1125 cfm (1 SONNE MAX) OUTSIDE AIR INTAKE MIN. 10' FROM PLUMBING VENTS AND TERMINATIONS OF MECH. EXHAUSTS
- SD SMOKE DETECTOR - IONIZATION ALARM w/ SILENCING SWITCH OR PHOTOELECTRIC ALARM CRC R314.3.3(4)
- CM CARBON MONOXIDE DETECTOR
- STOVE / RANGE HOOD VENT TO OUTSIDE

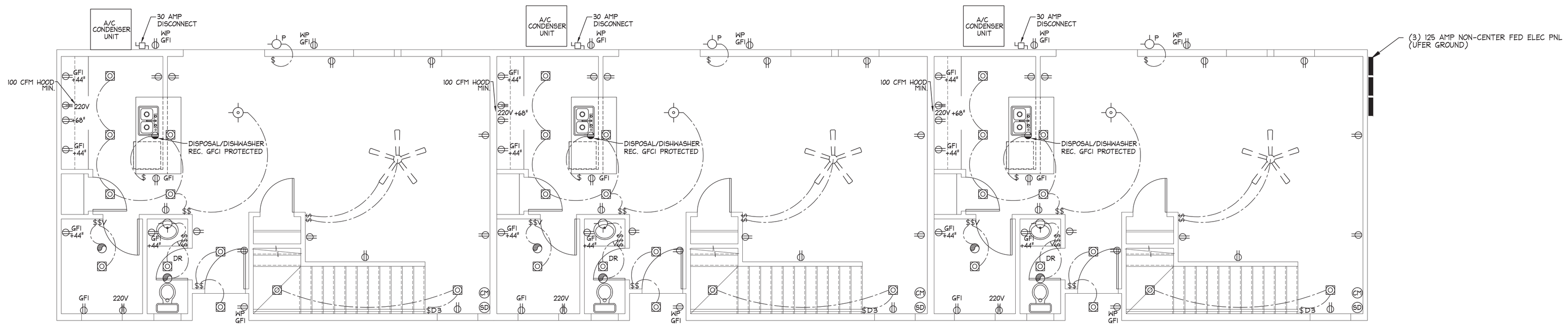

NOTE

SEE SHEET E1.2 FOR ELECTRICAL, MECHANICAL, AND PLUMBING NOTES

FIRST FLOOR ELECTRICAL PLAN

1/4" = 1'-0"

REV	DATE	DESCRIPTION	BY

DATE: 09/25/24

SCALE: As Noted

PREPARED BY:

PBPdrafting&design
pbpdrafting@aol.com

2924 Sierra St, Riverbank, CA 95367
Residence for Sammy Allatry

First Floor Electrical Plan

E1.1

PBPDRAFTING EXPRESSLY RESERVES ITS COMMON LAW COPYRIGHT AND OTHER PROPERTY RIGHTS IN THESE PLANS. THEY MAY NOT BE REPRODUCED, CHANGED, COPIED, ASSIGNED TO ANY OR USED FOR OTHER THAN THAT INTENDED WITHOUT FIRST OBTAINING THE WRITTEN PERMISSION AND CONSENT BY DESIGNER

LEGEND

- SINGLE POLE SWITCH
- 3 THREE POLE SWITCH
- D DIMMER SWITCH
- V VACANCY SENSOR SWITCH
- DUPLEX CONVENIENCE OUTLET, 120V
- FOURPLEX CONVENIENCE OUTLET, 120V
- WP/GFI WEATHER PROOF/ GROUND FAULT INTERUPTER
- 1/2 SWITCHED, 120V
- EV ELECTRONIC VEHICLE RACEWAY
- 220V OUTLET, 220V
- SURFACE MOUNTED CEILING LIGHT
- WALL HUNG FIXTURE
- P WALL HUNG FIXTURE w/ PHOTOCELL/ MOTION SENSOR
- HANGING CEILING LIGHT
- RECESSED CEILING LED LIGHT
- DR RECESSED CEILING LED LIGHT (DAMP/WET RATED)
- LED LIGHT FIXTURE
- CEILING FAN/LIGHT
- ELECTRICAL PANEL
- EXHAUST FAN (50 CFM MIN)
- WHOLE HOUSE FAN 1125 cfm (1 SONNE MAX) OUTSIDE AIR INTAKE MIN. 10' FROM PLUMBING VENTS AND TERMINATIONS OF MECH. EXHAUSTS
- SD SMOKE DETECTOR
- CM CARBON MONOXIDE DETECTOR
- KITCHEN RANGE HOOD VENT TO OUTSIDE

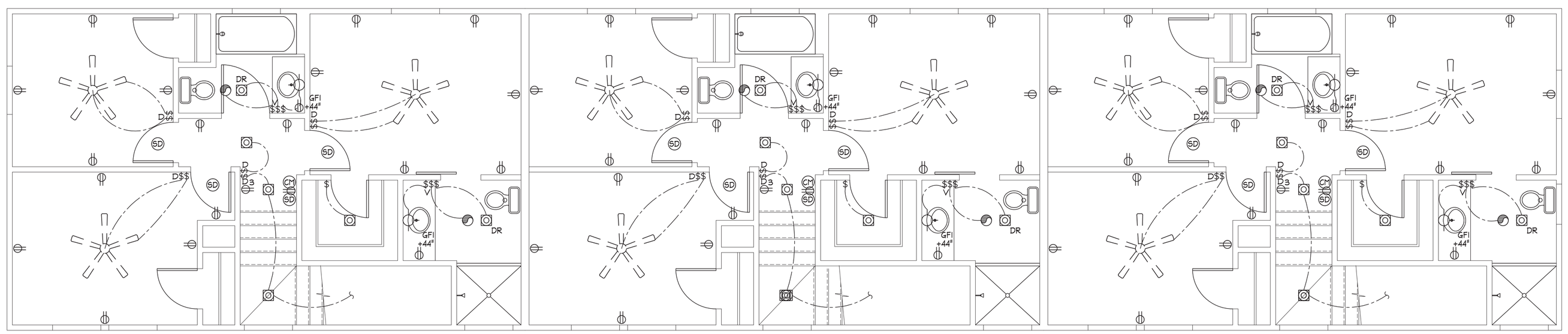

NOTE

SEE SHEET E1.3 FOR ELECTRICAL, MECHANICAL, AND PLUMBING NOTES

SECOND FLOOR ELECTRICAL PLAN

1/4" = 1'-0"

REV	DATE	DESCRIPTION	BY

DATE: 09/25/24

SCALE: As Noted

PREPARED BY:
PBPdrafting&design
pbpdrafting@aol.com

2924 Sierra St, Riverbank, CA 95367
Residence for Sammy Allatry

Second Floor Electrical Plan

E1.2

PBPDRAFTING EXPRESSLY RESERVES IT'S COMMON LAW COPYRIGHT AND OTHER PROPERTY RIGHTS IN THESE PLANS. THEY MAY NOT BE REPRODUCED, CHANGED, COPIED, ASSIGNED TO ANY OR USED FOR OTHER THAN THAT INTENDED WITHOUT FIRST OBTAINING THE WRITTEN PERMISSION AND CONSENT BY DESIGNER

MECHANICAL NOTES:

1. ALL AIR DUCTS (VENT FANS, RANGE HOODS, DRYERS, ETC.,) SHALL TERMINATE NO LESS THAN 36" FROM PROPERTY LINE OR 36" FROM OPENING INTO THE BUILDING.
2. (EF) EXHAUST FAN
   EXHAUST FAN SHALL PROVIDE 5 AIR CHANGES PER HOUR THE POINT OF DISCHARGE SHALL BE AT LEAST 3-FEET FROM ANY OPENING THAT ALLOWS AIR ENTRY INTO THE OCCUPIED PORTIONS OF THE HOUSE.
3. BATHROOM FANS SHALL BE CONTROLLED BY A HUMIDISTAT WHICH SHALL BE READILY ACCESSIBLE. HUMIDISTAT CONTROLS SHALL BE CAPABLE OF ADJUSTMENT BETWEEN A RELATIVE HUMIDITY RANGE OF 50 TO 80 PERCENT. CA GREEN CODE SECTION 4.506.1.
4. DRYER EXHAUST DUCTS WILL BE LIMITED TO 14'-0" MAX LENGTH AND TWO ELBOWS, METAL w/ SMOOTH INTERIOR SURFACE.
5. WHEN A CLOTHES DRYER IS INSTALLED IN A CLOSET, A 100 SQ INCH OPENING IS REQUIRED FOR MAKE-UP AIR PER CMC SECTION 504.3.2.
6. PROVIDE AN ACCESS OPENING TO THE ATTIC SPACE CAPABLE OF ACCOMMODATING THE LARGEST PIECE OF THE EQUIPMENT BUT NOT SMALLER THAN 22"x30" MINIMUM. CMC 304.4
7. PROVIDE A CLEAR PATH FROM THE ACCESS OPENING TO THE ATTIC FURNACE UNIT TO ACCOMMODATE THE LARGEST PIECE
8. THE PASSAGEWAY FROM ACCESS OPENING TO THE UNIT SHALL NOT EXCEED 20 FEET AS MEASURED ALONG THE CENTER LINE OF THE PASSAGEWAY. THE PASSAGEWAY SHALL BE UNOBSTRUCTED AND SHALL HAVE CONTINUOUS SOLID FLOORING NOT LESS THAN 24" IN WIDTH FROM THE ACCESS OPENING TO THE UNIT.
9. PROVIDE A MINIMUM 30"x30" WORKING PLATFORM IN FRONT OF THE FIREBOX SIDE OF THE UNIT AND IF THE FURNACE CONTROLS ARE NOT ACCESSIBLE FROM THIS SIDE OF THE UNIT A MINIMUM 24" WIDE PLATFORM SHALL BE PROVIDED FROM THE FIREBOX PLATFORM TO THE CONTROLS. A WORKING PLATFORM NEED NOT BE REQUIRED WHEN THE FIREBOX AND CONTROLS CAN BE ACCESSED DIRECTLY FROM THE ACCESS OPENING. CMC 304.4.3
10. PROVIDE A PERMANENT ELECTRICAL OUTLET AND LIGHTING FIXTURE CONTROLLED BY A SWITCH LOCATED AT THE ACCESS OPENING AT OR NEAR THE ATTIC FURNACE UNIT.
11. PROVIDE CLEARANCES OF ATTIC FURNACE UNIT AS REQUIRED PER 2022 CMC SECTION 1106.3

PLUMBING NOTES:

1. ALL PLUMBING MATERIALS AND WORK SHALL CONFORM TO THE 2022 EDITION OF THE CALIFORNIA PLUMBING CODE.
2. THE CONTRACTOR SHALL VERIFY ALL SERVICE CONNECTIONS WITH THE APPROTRIATE AGENCIES, PRIOR TO ANY WORK.
3. THE CONTRACTOR SHALL COORDINATE ALL SERVICE CONNECTIONS FOR THE WORK WITH APPROPRIATE AGENCIES.
4. THE PLUMBING COONTRACTOR SHALL VERIFY ALL LINE SIZES AND REPORT ANY DISCREPANCIES TO THE GENERAL CONTRACTOR.
5. ALL BATHTUBS AND SHOWERS TO HAVE AN APPROVED PLASTIC OR BRASS OVER-FLOW SOLID TRAP AND OVERFLOW FITTING.
6. CUTTING, NOTCHING OR BORING OF PLATES OR STUDS SHALL CONFORM TO THE UNIFORM BUILDING CODE.
7. ALL WATERHEATERS SHALL HAVE A MINIMUM $\frac{3}{4}$" TEMPERATURE AND PRESSURE RELIEF VALVE TO DISCHARGE TO EXTERIOR OF BUILDING WITHIN 24 INCHES OF FINISHED GRADE.
8. ALL PLUMBING LINES THAT PENETRATE A COMMON PARTY WALL, SOUND RATED SHALL BE FULLY CAULKED AT THE INTERSECTION OF THE WALL AND PIPE.
9. PROVIDE SHUT-OFF VALVE FOR COLD WATER SUPPLY TO THE BUILDING.
10. PROVIDE TWO-WAY CLEANOUT(S) AT THE CONNECTION OF THE HOUSE DRAIN AND THE BUIDLING SEWER.
11. PROVIDE AIR GAP ON DISCHARGE SIDE OF WASTE LINE AT ALL DISHWASHERS.
12. ALL HORIZONTAL DRAIN LINES OVER 5 FEET IN LENGTH SHALL BE PROVIDED WITH A CLEANOUT.
13. ALL VENT PIPING SHALL BE TAKEN OFF ABOVE WIER OF EACH TRAP.
14. BACKWATER VALVE MUST BE INSTALLED AT SEWER CLEANOUT ON LOWER END OF BUILDING DRAIN.
15. PRESSURIZED PIPING UNDER SLAB FLOORS IS PROHIBITED.
16. ALL WATER PIPES REQUIRE INSULATION.
17. SHOWER VALVES SHALL BE AN INDIVIDUAL CONTROL VALVE OF THE PRESSURE BALANCE OR THERMOSTATIC MIXING VALVE TYPE. HANDLE POSITION STOPS SHALL BE PROVIDED ON SUCH VALVES TO LIMIT THE MIXED WATER TO A MAXIMUM TEMPERATURE OF 120 DEGREES FAHRENHEIT. 2022 CPC SECTION 418
18. PLUMBING FIXTURE FLOW CHART PER CGC SECTION 301.1.1:
    TOILET: 1.28 GAL/FLUSH
    SHOWER HEAD: 1.8 GAL/MIN.
    KITCHEN FAUCET: 1.8 GAL/MIN.
    BATH FAUCET: 1.2 GAL/MIN.
19. HOSE BIBS TO BE PROTECTED WITH A NONREMOVABLE HOSE-BIB-TYPE BACKFLOW PREVENTER, A NONREMOVABLE HOSE-BIB-TYPE VACUUM BREAKER, OR BY AN ATMOSPHERIC VACUUM BREAKER INSTALLED NOT LESS THAN 6 INCHES ABOVE THE HIGHEST POINT OF USAGE LOCATED ON THE DISCHARGE SIDE OF THE LAST VALVE. CPC 603.5.7
20. ALL WATERHEATERS SHALL HAVE A MINIMUM$\frac{3}{4}$" TEMPERATURE AND PRESSURE RELIEF VALVE TO DISCHARGE TO EXTERIOR OF BUILDING WITHIN 24 INCHES OF FINISHED GRADE.
21. WATER HEATERS SHALL BE PROVIDED WITH A CONDENSATE DRAIN THAT IS NO MORE THAN 2 INCHES HIGHER THAN THE BASE OF THE INSTALLED WATER HEATER, AND ALLOWS GRAVITY DRAINING WITHOUT PUMP ASSISTANCE
    IF A WATER HEATER VENT PIPE MAKES BENDS THROUGH THE BUILDING STRUCTURE, THEN IT SHALL BE EITHER A CATEGORY III OR IV VENT PIPE (TYPICALLY, ONLY STAINLESS STEEL CATEGORY III OR IV VENT PIPE IS COMPATIBLE WITH ALL TYPES OF WATER HEATERS)
    ANY WATER SYSTEM PROVIDED WITH A CHECK VALVE, BACK FLOW PREVENTER, OR ANY OTHER NORMALLY CLOSED DEVICE THAT PREVENTS DISSIPATION OF BUILDING PRESSURE BACK INTO THE WATER MAIN SHALL BE PROVIDED WITH AN APPROVED, LISTED, AND ADEQUATELY SIZED EXPANSION TANK (OR OTHER DEVICE DESIGNED FOR INTERMITTENT OPERATION FOR THERMAL EXPANSION CONTROL)
22. WATER HEATER SHALL BE ANCHORED OR STRAPPED TO RESIST HORIZONTAL DISPLACEMENT PER CPC 507.2
    SEISMIC STRAPS SHALL BE INSTALLED FOR THE TOP AND BOTTOM 1/3 OF THE TANK.

ELECTRICAL NOTES:

1. PRIMARY LIGHTING IN BATHS AND KITCHENS SHALL BE FLUORESCENT FLUORESCENT LIGHTS SHALL NOT BE SCREW IN TYPE.
2. 210.12 ARC FAULT CIRCUIT - INTERRUPTER DWELLING UNITS.
   ALL 120 VOLTS SINGLE PHASE, 15 AMP AND 20 AMPERE BRANCH CIRCUITS SUPPLY OUTLETS INSTALLED IN DWELLING UNIT FAMILY ROOMS, DINING ROOMS, LIVING ROOMS, PARLORS, LIBRARIES, DENS, BEDROOMS, SUNROOMS, RECREATION ROOMS, CLOSETS, HALLWAYS, KITCHENS, LAUNDRY ROOM, OR SIMILAR AREAS SHALL BE PROTECTED BY A LISTED ARC FAULT CIRCUIT INTERRUPTER, COMBINATION TYPE, INSTALLED TO PROVIDE PROTECTION OF BRANCH CIRCUIT.
3. BATHROOM BRACH CIRCUIT REQUIRED. THE BATHROOM RECEPTACLE REQUIRED IN SECTION 210-52(d) MUST BE SUPPLIED BY A 20 AMPERE CIRCUIT THAT DOES NOT SUPPLY ANY OTHER LOAD.
4. PROVIDE GROUND FAULT INTERRUPTING (GFI) CIRCUITS AS FOLLOWS;
   A) KITCHEN: ALL OUTLETS
   B) BATHROOMS: ALL OUTLETS
   C) GARAGE: ALL DUPLEX RECEPTACLES
   D) EXTERIOR: ALL EXTERIOR RECEPTICLES SHALL BE GFCI PROTECTED PER THE 2022 CEC ARTICLE 210.8
5. ALL ELECTRICAL OUTLETS SHALL BE +18" AFF UON.
6. HIGH EFFICIENCY LAMPS ARE REQUIRED FOR THE KITCHEN, BATHROOMS, AND GARAGE PER 2022 CEC 150(k)3
   A MINIMUM OF ONE HIGH EFFICACY LIGHTING FIXTURE SHALL BE INSTALLED IN EACH BATHROOM. ALL OTHER LIGHTING INSTALLED IN EACH BATHROOM SHALL BE HIGH EFFICACY AND CONTROLLED BY VACANCY SENSORS.
7. OUTDOOR LIGHTING SHALL BE HIGH EFFICIENCY LAMPS AND SHALL BE CONTROLLED BY MOTION SENSORS/PHOTO CONTROL PER 2022 CEC 150(k)6.
8. ALL 125-VOLT, 15 AND 20 AMPERE RECEPATCLE OUTLETS SHALL BE LISTED TAMPER -REISTANT RECEPTACLES PER CEC 406.11
9. (SD) SMOKE DETECTOR
   SMOKE ALARMS SHALL BE REPLACED AFTER 10 YEARS FROM MANUFACTURE MARKED ON THE UNIT, OR IF THE DATE OF MANUFACTURE CANNOT BE DETERMINED. ADDITIONALLY CONVENTIONAL IONIZATION SMOKE ALARMS THAT ARE SOLELY BATTERY POWERED SHALL BE EQUIPPED WITH A 10 YEAR BATTERY AND HAVE A SILENCE FEATURE. (CRC R314.3.2 & R314.3.3)
10. SMOKE DETECTORS SHALL BE INSTALLED PER 2022 CFC 907.2.11.4
    LOCATION: INSIDE EACH BEDROOM, IN THE HALLWAY IN THE IMMEDIATE VICINITY OF BEDROOMS, IN A MULTI-STORY HOUE ON THE CEILING ABOVE THE ANY STAIR WAY, AND IN ANY DEVELOPED ATTIC OR BASEMENT. IF THERE IS MORE THAN ONE AREA IN THE HOUSE WITH BEDROOMS THEN ONE DETECTOR IS REQUIRED IN EACH "HALLWAY" AREA. THEY SHOULD BE LOCATED AWAY FROM KITCHENS OR FIREPLACES THAT MIGHT TRIGGER THEM.
    INTERCONNECTION: SMOKE DETECTORS SHALL BE INTERCONNECTED IN SUCH A A MANNER THAT THE ACTIVATION OF ONE SMOKE DETECTOR WILL SIMULTANEOUSLY ACTIVATE EVERY SMOKE DETECTOR IN THE HOUSE. SMOKE DETECTORS ARE NOT REQUIRED TO BE INTERCONNECTED WITH CARBON MONOXIDE DETECTORS.
    POWER: IN NEW CONSTRUCTION, SMOKE DETECTORS SHALL RECIEVE THEIR PRIMARY POWER FROM THE BUILDING WIRING AND SHALL BE EQUIPPED WITH A BATTERY BACK UP.
11. SMOKE DETECTORS SHALL NOT BE INSTALLED WITHIN A 36" HORIZONTAL PATH FROM THE SUPPLY REGISTERS OF A FORCED AIR HEATING OR COOLING SYSTEM AND SHALL BE INSTALLED OUTSIDE OF THE DIRECT AIRFLOW FROM THOSE REGISTERS.
12. SMOKE DETECTORS SHALL NOT BE INSTALLED LESS THAN 36" FROM THE DOOR OR OPENING OF A BATH ROOM WITH A TUB OR SHOWER.
13. (CM) CARBON MONOXIDE ALARMS PER 2022 CRC, SECTION R315.
14. CARBON MONOXIDE DETECTORS OUTSIDE EACH SEPARATE SLEEPING AREA IN THE IMMEDIATE VICINITY OF THE BEDROOMS. (CRC R315.2.6)
15. CARBON MONOXIDE ALARMS SHALL BE INSTALLED PER 2022 CBC 420.6
    LOCATION: IN THE HALLWAY IN THE IMMEDIATE VICINITY OF BEDROOMS AND IN EACH DEVELOPED STROY INCLUDING THE BASEMENT. IF THERE IS MORE THAN ONE SLEEPING AREA THEN ONE DETECTOR IS REQUIRED PER EACH AREA.
    INTERCONNECTION: IF THERE IS MORE THAN ONE CARBON MONOXIDE DETECTOR THEY SHALL BE INTERCONNECTED IN SUCH A MANNER THAT THE ACTIVATION OF ONE DETECTOR WILL ACTIVATE ALL OF THE DECTORS IN THE HOUSE. CARBON MONOXIDE DETECTORS ARE NOT REQUIRED TO BE INTERCONNECTED WITH SMOKE DETECTORS.
    POWER: IN NEW CONSTRUCTION, CARBON MONOXIDE DETECTORS SHALL RECIEVE THEIR PRIMARY POWER FROM THE BUILDING WIRING AND SHALL BE EQUIPPED WITH A BATTERY BACK UP.
16. AN INTERSYSTEM BONDING TERMINATION FOR CONNECTION OF BONDING CONDUCTORS REQUIRED FOR COMMUNICATION SYSTEMS SHALL BE PROVIDED EXTERNAL TO ENCLOSURES AT THE SERVICE EQUIPMENT OR METERING EQUIPMENT ENCLOSURE. THE INTERSYSTEM BONDING TERMINATION SHALL CONSIST OF A SET OF TERMINALS WITH THE CAPACITY FOR CONNECTION OF NOT LESS THAN THREE COMMUNICATION SYSTEMS BONDING CONDUCTORS.
17. LIGHTING INSTALLED IN GARAGES, LAUNDRY ROOMS AND UTILITY ROOMS SHALL BE CONTROLLED BY VACANCY SENSORS.

ELECTRICAL, PLUMBING, MECHANICAL NOTES

1/4" = 1'-0"

REV	DATE	DESCRIPTION	BY

DATE: 09/25/24

SCALE: As Noted

PREPARED BY:

PBPdrafting&design
pbpdrafting@aol.com

2924 Sierra St, Riverbank, CA 95367
Residence for Sammy Allatry

Electrical, Plumbing, Mechanical Notes

E1.3

2022 CALIFORNIA GREEN BUILDING STANDARDS CODE
RESIDENTIAL MANDATORY MEASURES, SHEET 1 (January 2023)

Y = YES
N/A = NOT APPLICABLE
RESPON. PARTY = RESPONSIBLE PARTY (ie: ARCHITECT, ENGINEER, OWNER, CONTRACTOR, INSPECTOR ETC.)

CHAPTER 3
GREEN BUILDING
SECTION 301 GENERAL

301.1 SCOPE. Buildings shall be designed to include the green building measures specified as mandatory in the application checklists contained in this code. Voluntary green building measures are also included in the application checklists and may be included in the design and construction of structures covered by this code, but are not required unless adopted by a city, county, or city and county as specified in Section 101.7.

301.1.1 Additions and alterations. [HCD] The mandatory provisions of Chapter 4 shall be applied to additions or alterations of existing residential buildings where the addition or alteration increases the building's conditioned area, volume, or size. The requirements shall apply only to and/or within the specific area of the addition or alteration.

The mandatory provision of Section 4.106.4.2 may apply to additions or alterations of existing parking facilities or the addition of new parking facilities serving existing multifamily buildings. See Section 4.106.4.3 for application.

Note: Repairs including, but not limited to, resurfacing, restriping and repairing or maintaining existing lighting fixtures are not considered alterations for the purpose of this section.

Note: On and after January 1, 2014, residential buildings undergoing permitted alterations, additions, or improvements shall replace noncompliant plumbing fixtures with water-conserving plumbing fixtures. Plumbing fixture replacement is required prior to issuance of a certificate of final completion, certificate of occupancy or final permit approval by the local building department. See Civil Code Section 1101.1, et seq., for the definition of a noncompliant plumbing fixture, types of residential buildings affected and other important enactment dates.

301.2 LOW-RISE AND HIGH-RISE RESIDENTIAL BUILDINGS. [HCD] The provisions of individual sections of CALGreen may apply to either low-rise residential buildings high-rise residential buildings, or both. Individual sections will be designated by banners to indicate where the section applies specifically to low-rise only (LR) or high-rise only (HR). When the section applies to both low-rise and high-rise buildings, no banner will be used.

SECTION 302 MIXED OCCUPANCY BUILDINGS

302.1 MIXED OCCUPANCY BUILDINGS. In mixed occupancy buildings, each portion of a building shall comply with the specific green building measures applicable to each specific occupancy.
Exceptions:
1. [HCD] Accessory structures and accessory occupancies serving residential buildings shall comply with Chapter 4 and Appendix A4, as applicable.
2. [HCD] For purposes of *CAL*Green, live/work units, complying with Section 419 of the *California Building Code*, shall not be considered mixed occupancies. Live/Work units shall comply with Chapter 4 and Appendix A4, as applicable.

DIVISION 4.1 PLANNING AND DESIGN

ABBREVIATION DEFINITIONS:

HCD	Department of Housing and Community Development
BSC	California Building Standards Commission
DSA-SS	Division of the State Architect, Structural Safety
OSHPD	Office of Statewide Health Planning and Development
LR	Low Rise
HR	High Rise
AA	Additions and Alterations
N	New

CHAPTER 4
RESIDENTIAL MANDATORY MEASURES

SECTION 4.102 DEFINITIONS
4.102.1 DEFINITIONS
The following terms are defined in Chapter 2 *(and are included here for reference)*

FRENCH DRAIN. A trench, hole or other depressed area loosely filled with rock, gravel, fragments of brick or similar pervious material used to collect or channel drainage or runoff water.

WATTLES. Wattles are used to reduce sediment in runoff. Wattles are often constructed of natural plant materials such as hay, straw or similar material shaped in the form of tubes and placed on a downflow slope. Wattles are also used for perimeter and inlet controls.

4.106 SITE DEVELOPMENT
4.106.1 GENERAL. Preservation and use of available natural resources shall be accomplished through evaluation and careful planning to minimize negative effects on the site and adjacent areas. Preservation of slopes, management of storm water drainage and erosion controls shall comply with this section.

4.106.2 STORM WATER DRAINAGE AND RETENTION DURING CONSTRUCTION. Projects which disturb less than one acre of soil and are not part of a larger common plan of development which in total disturbs one acre or more, shall manage storm water drainage during construction. In order to manage storm water drainage during construction, one or more of the following measures shall be implemented to prevent flooding of adjacent property, prevent erosion and retain soil runoff on the site.

1. Retention basins of sufficient size shall be utilized to retain storm water on the site.
2. Where storm water is conveyed to a public drainage system, collection point, gutter or similar disposal method, water shall be filtered by use of a barrier system, wattle or other method approved by the enforcing agency.
3. Compliance with a lawfully enacted storm water management ordinance.

Note: Refer to the State Water Resources Control Board for projects which disturb one acre or more of soil, or are part of a larger common plan of development which in total disturbs one acre or more of soil.

(Website: https://www.waterboards.ca.gov/water_issues/programs/stormwater/construction.html)

4.106.3 GRADING AND PAVING. Construction plans shall indicate how the site grading or drainage system will manage all surface water flows to keep water from entering buildings. Examples of methods to manage surface water include, but are not limited to, the following:

1. Swales
2. Water collection and disposal systems
3. French drains
4. Water retention gardens
5. Other water measures which keep surface water away from buildings and aid in groundwater recharge.

Exception: Additions and alterations not altering the drainage path.

4.106.4 Electric vehicle (EV) charging for new construction. New construction shall comply with Sections 4.106.4.1 or 4.106.4.2 to facilitate future installation and use of EV chargers. Electric vehicle supply equipment (EVSE) shall be installed in accordance with the *California Electrical Code,* Article 625.

Exceptions:
1. On a case-by-case basis, where the local enforcing agency has determined EV charging and infrastructure are not feasible based upon one or more of the following conditions:
   1.1 Where there is no local utility power supply or the local utility is unable to supply adequate power.
   1.2 Where there is evidence suitable to the local enforcing agency substantiating that additional local utility infrastructure design requirements, directly related to the implementation of Section 4.106.4, may adversely impact the construction cost of the project.
2. Accessory Dwelling Units (ADU) and Junior Accessory Dwelling Units (JADU) without additional parking facilities.

4.106.4.1 New one- and two-family dwellings and townhouses with attached private garages. For each dwelling unit, install a listed raceway to accommodate a dedicated 208/240-volt branch circuit. The raceway shall not be less than trade size 1 (nominal 1-inch inside diameter). The raceway shall originate at the main service or subpanel and shall terminate into a listed cabinet, box or other enclosure in close proximity to the proposed location of an EV charger. Raceways are required to be continuous at enclosed, inaccessible or concealed areas and spaces. The service panel and/or subpanel shall provide capacity to install a 40-ampere 208/240-volt minimum dedicated branch circuit and space(s) reserved to permit installation of a branch circuit overcurrent protective device.

Exemption: A raceway is not required if a minimum 40-ampere 208/240-volt dedicated EV branch circuit is installed in close proximity to the proposed location of an EV charger at the time of original construction in accordance with the *California Electrical Code*.

4.106.4.1.1 Identification. The service panel or subpanel circuit directory shall identify the overcurrent protective device space(s) reserved for future EV charging as "EV CAPABLE". The raceway termination location shall be permanently and visibly marked as "EV CAPABLE".

4.106.4.2 New multifamily dwellings, hotels and motels and new residential parking facilities.
When parking is provided, parking spaces for new multifamily dwellings, hotels and motels shall meet the requirements of Sections 4.106.4.2.1 and 4.106.4.2.2. Calculations for spaces shall be rounded up to the nearest whole number. A parking space served by electric vehicle supply equipment or designed as a future EV charging space shall count as at least one standard automobile parking space only for the purpose of complying with any applicable minimum parking space requirements established by a local jurisdiction. See Vehicle Code Section 22511.2 for further details.

4.106.4.2.1Multifamily development projects with less than 20 dwelling units; and hotels and motels with less than 20 sleeping units or guest rooms.
The number of dwelling units, sleeping units or guest rooms shall be based on all buildings on a project site subject to this section.

1.EV Capable. Ten (10) percent of the total number of parking spaces on a building site, provided for all types of parking facilities, shall be electric vehicle charging spaces (EV spaces) capable of supporting future Level 2 EVSE. Electrical load calculations shall demonstrate that the electrical panel service capacity and electrical system, including any on-site distribution transformer(s), have sufficient capacity to simultaneously charge all EVs at all required EV spaces at a minimum of 40 amperes.

The service panel or subpanel circuit directory shall identify the overcurrent protective device space(s) reserved for future EV charging purposes as "EV CAPABLE" in accordance with the California Electrical Code.

Exceptions:

1.When EV chargers (Level 2 EVSE) are installed in a number equal to or greater than the required number of EV capable spaces.

2.When EV chargers (Level 2 EVSE) are installed in a number less than the required number of EV capable spaces, the number of EV capable spaces required may be reduced by a number equal to the number of EV chargers installed.

Notes:

a.Construction documents are intended to demonstrate the project's capability and capacity for facilitating future EV charging.

b.There is no requirement for EV spaces to be constructed or available until receptacles for EV charging or EV chargers are installed for use.

2.EV Ready. Twenty-five (25) percent of the total number of parking spaces shall be equipped with low power Level 2 EV charging receptacles. For multifamily parking facilities, no more than one receptacle is required per dwelling unit when more than one parking space is provided for use by a single dwelling unit.

Exception: Areas of parking facilities served by parking lifts.

4.106.4.2.2 Multifamily development projects with 20 or more dwelling units, hotels and motels with 20 or more sleeping units or guest rooms.
The number of dwelling units, sleeping units or guest rooms shall be based on all buildings on a project site subject to this section.

1.EV Capable. Ten (10) percent of the total number of parking spaces on a building site, provided for all types of parking facilities, shall be electric vehicle charging spaces (EV spaces) capable of supporting future Level 2 EVSE. Electrical load calculations shall demonstrate that the electrical panel service capacity and electrical system, including any on-site distribution transformer(s), have sufficient capacity to simultaneously charge all EVs at all required EV spaces at a minimum of 40 amperes.

The service panel or subpanel circuit directory shall identify the overcurrent protective device space(s) reserved for future EV charging purposes as "EV CAPABLE" in accordance with the California Electrical Code.

Exception: When EV chargers (Level 2 EVSE) are installed in a number greater than five (5) percent of parking spaces required by Section 4.106.4.2.2, Item 3, the number of EV capable spaces required may be reduced by a number equal to the number of EV chargers installed over the five (5) percent required.

Notes:

a.Construction documents shall show locations of future EV spaces.

b.There is no requirement for EV spaces to be constructed or available until receptacles for EV charging or EV chargers are installed for use.

2.EV Ready. Twenty-five (25) percent of the total number of parking spaces shall be equipped with low power Level 2 EV charging receptacles. For multifamily parking facilities, no more than one receptacle is required per dwelling unit when more than one parking space is provided for use by a single dwelling unit.

Exception: Areas of parking facilities served by parking lifts.

3.EV Chargers. Five (5) percent of the total number of parking spaces shall be equipped with Level 2 EVSE. Where common use parking is provided, at least one EV charger shall be located in the common use parking area and shall be available for use by all residents or guests.

When low power Level 2 EV charging receptacles or Level 2 EVSE are installed beyond the minimum required, an automatic load management system (ALMS) may be used to reduce the maximum required electrical capacity to each space served by the ALMS. The electrical system and any on-site distribution transformers shall have sufficient capacity to deliver at least 3.3 kW simultaneously to each EV charging station (EVCS) served by the ALMS. The branch circuit shall have a minimum capacity of 40 amperes, and installed EVSE shall have a capacity of not less than 30 amperes. ALMS shall not be used to reduce the minimum required electrical capacity to the required EV capable spaces.

4.106.4.2.2.1 Electric vehicle charging stations (EVCS).
Electric vehicle charging stations required by Section 4.106.4.2.2, Item 3, shall comply with Section 4.106.4.2.2.1.

Exception: Electric vehicle charging stations serving public accommodations, public housing, motels and hotels shall not be required to comply with this section. See California Building Code, Chapter 11B, for applicable requirements.

4.106.4.2.2.1.1 Location.
EVCS shall comply with at least one of the following options:

1.The charging space shall be located adjacent to an accessible parking space meeting the requirements of the California Building Code, Chapter 11A, to allow use of the EV charger from the accessible parking space.

2.The charging space shall be located on an accessible route, as defined in the California Building Code, Chapter 2, to the building.

Exception: Electric vehicle charging stations designed and constructed in compliance with the California Building Code, Chapter 11B, are not required to comply with Section 4.106.4.2.2.1.1 and Section 4.106.4.2.2.1.2, Item 3.

4.106.4.2.2.1.2 Electric vehicle charging stations (EVCS) dimensions.
The charging spaces shall be designed to comply with the following:

1.The minimum length of each EV space shall be 18 feet (5486 mm).

2.The minimum width of each EV space shall be 9 feet (2743 mm).

3.One in every 25 charging spaces, but not less than one, shall also have an 8-foot (2438 mm) wide minimum aisle. A 5-foot (1524 mm) wide minimum aisle shall be permitted provided the minimum width of the EV space is 12 feet (3658 mm).

a.Surface slope for this EV space and the aisle shall not exceed 1 unit vertical in 48 units horizontal (2.083 percent slope) in any direction.

4.106.4.2.2.1.3 Accessible EV spaces.
In addition to the requirements in Sections 4.106.4.2.2.1.1 and 4.106.4.2.2.1.2, all EVSE, when installed, shall comply with the accessibility provisions for EV chargers in the California Building Code, Chapter 11B. EV ready spaces and EVCS in multifamily developments shall comply with California Building Code, Chapter 11A, Section 1109A.

4.106.4.2.3 EV space requirements.
1.Single EV space required. Install a listed raceway capable of accommodating a 208/240-volt dedicated branch circuit. The raceway shall not be less than trade size 1 (nominal 1-inch inside diameter). The raceway shall originate at the main service or subpanel and shall terminate into a listed cabinet, box or enclosure in close proximity to the location or the proposed location of the EV space. Construction documents shall identify the raceway termination point, receptacle or charger location, as applicable. The service panel and/ or subpanel shall have a 40-ampere minimum dedicated branch circuit, including branch circuit overcurrent protective device installed, or space(s) reserved to permit installation of a branch circuit overcurrent protective device.

Exception: A raceway is not required if a minimum 40-ampere 208/240-volt dedicated EV branch circuit is installed in close proximity to the location or the proposed location of the EV space, at the time of original construction in accordance with the California Electrical Code.

2.Multiple EV spaces required. Construction documents shall indicate the raceway termination point and the location of installed or future EV spaces, receptacles or EV chargers. Construction documents shall also provide information on amperage of installed or future receptacles or EVSE, raceway method(s), wiring schematics and electrical load calculations. Plan design shall be based upon a 40-ampere minimum branch circuit. Required raceways and related components that are planned to be installed underground, enclosed, inaccessible or in concealed areas and spaces shall be installed at the time of original construction.

Exception: A raceway is not required if a minimum 40-ampere 208/240-volt dedicated EV branch circuit is installed in close proximity to the location or the proposed location of the EV space at the time of original construction in accordance with the California Electrical Code.

4.106.4.2.4 Identification.
The service panel or subpanel circuit directory shall identify the overcurrent protective device space(s) reserved for future EV charging purposes as "EV CAPABLE" in accordance with the California Electrical Code.

4.106.4.2.5 Electric Vehicle Ready Space Signage.
Electric vehicle ready spaces shall be identified by signage or pavement markings, in compliance with Caltrans Traffic Operations Policy Directive 13-01 (Zero Emission Vehicle Signs and Pavement Markings) or its successor(s).

4.106.4.3 Electric vehicle charging for additions and alterations of parking facilities serving existing multifamily buildings.
When new parking facilities are added, or electrical systems or lighting of existing parking facilities are added or altered and the work requires a building permit, ten (10) percent of the total number of parking spaces added or altered shall be electric vehicle charging spaces (EV spaces) capable of supporting future Level 2 EVSE.

Notes:

1.Construction documents are intended to demonstrate the project's capability and capacity for facilitating future EV charging.

2.There is no requirement for EV spaces to be constructed or available until EV chargers are installed for use.

DIVISION 4.2 ENERGY EFFICIENCY

4.201 GENERAL
4.201.1 SCOPE. For the purposes of mandatory energy efficiency standards in this code, the California Energy Commission will continue to adopt mandatory standards.

DIVISION 4.3 WATER EFFICIENCY AND CONSERVATION

4.303 INDOOR WATER USE
4.303.1 WATER CONSERVING PLUMBING FIXTURES AND FITTINGS. Plumbing fixtures (water closets and urinals) and fittings (faucets and showerheads) shall comply with the sections 4.303.1.1, 4.303.1.2, 4.303.1.3, and 4.303.4.4.

Note: All noncompliant plumbing fixtures in any residential real property shall be replaced with water-conserving plumbing fixtures. Plumbing fixture replacement is required prior to issuance of a certificate of final completion, certificate of occupancy, or final permit approval by the local building department. See Civil Code Section 1101.1, et seq., for the definition of a noncompliant plumbing fixture, types of residential buildings affected and other important enactment dates.

4.303.1.1 Water Closets. The effective flush volume of all water closets shall not exceed 1.28 gallons per flush. Tank-type water closets shall be certified to the performance criteria of the U.S. EPA WaterSense Specification for Tank-type Toilets.

Note: The effective flush volume of dual flush toilets is defined as the composite, average flush volume of two reduced flushes and one full flush.

4.303.1.2 Urinals. The effective flush volume of wall mounted urinals shall not exceed 0.125 gallons per flush. The effective flush volume of all other urinals shall not exceed 0.5 gallons per flush.

4.303.1.3 Showerheads.

4.303.1.3.1 Single Showerhead. Showerheads shall have a maximum flow rate of not more than 1.8 gallons per minute at 80 psi. Showerheads shall be certified to the performance criteria of the U.S. EPA WaterSense Specification for Showerheads.

4.303.1.3.2 Multiple showerheads serving one shower. When a shower is served by more than one showerhead, the combined flow rate of all the showerheads and/or other shower outlets controlled by a single valve shall not exceed 1.8 gallons per minute at 80 psi, or the shower shall be designed to only allow one shower outlet to be in operation at a time.

Note: A hand-held shower shall be considered a showerhead.

4.303.1.4 Faucets.

4.303.1.4.1 Residential Lavatory Faucets. The maximum flow rate of residential lavatory faucets shall not exceed 1.2 gallons per minute at 60 psi. The minimum flow rate of residential lavatory faucets shall not be less than 0.8 gallons per minute at 20 psi.

4.303.1.4.2 Lavatory Faucets in Common and Public Use Areas. The maximum flow rate of lavatory faucets installed in common and public use areas (outside of dwellings or sleeping units) in residential buildings shall not exceed 0.5 gallons per minute at 60 psi.

4.303.1.4.3 Metering Faucets. Metering faucets when installed in residential buildings shall not deliver more than 0.2 gallons per cycle.

4.303.1.4.4 Kitchen Faucets. The maximum flow rate of kitchen faucets shall not exceed 1.8 gallons per minute at 60 psi. Kitchen faucets may temporarily increase the flow above the maximum rate, but not to exceed 2.2 gallons per minute at 60 psi, and must default to a maximum flow rate of 1.8 gallons per minute at 60 psi.

Note: Where complying faucets are unavailable, aerators or other means may be used to achieve reduction.

4.303.1.4.5 Pre-rinse spray valves.
When installed, shall meet the requirements in the *California Code of Regulations*, Title 20 (Appliance Efficiency Regulations), Sections 1605.1 (h)(4) Table H-2, Section 1605.3 (h)(4)(A), and Section 1607 (d)(7) and shall be equipped with an integral automatic shutoff.

FOR REFERENCE ONLY: The following table and code section have been reprinted from the *California Code of Regulations*, Title 20 (Appliance Efficiency Regulations),Section 1605.1 (h)(4) and Section 1605.3 (h)(4)(A).

TABLE H-2

STANDARDS FOR COMMERCIAL PRE-RINSE SPRAY VALUES MANUFACTURED ON OR AFTER JANUARY 28, 2019

PRODUCT CLASS [spray force in ounce force (ozf)]	MAXIMUM FLOW RATE (gpm)
Product Class 1 (≤ 5.0 ozf)	1.00
Product Class 2 (> 5.0 ozf and ≤ 8.0 ozf)	1.20
Product Class 3 (> 8.0 ozf)	1.28

Title 20 Section 1605.3 (h)(4)(A): Commercial prerinse spray values manufactured on or after January 1, 2006, shall have a minimum spray force of not less than 4.0 ounces-force (ozf)[113 grams-force(gf)]

4.303.2 Submeters for multifamily buildings and dwelling units in mixed-used residential/commercial buildings.
Submeters shall be installed to measure water usage of individual rental dwelling units in accordance with the *California Plumbing Code.*

4.303.3 Standards for plumbing fixtures and fittings. Plumbing fixtures and fittings shall be installed in accordance with the *California Plumbing Code*, and shall meet the applicable standards referenced in Table 1701.1 of the *California Plumbing Code*.

NOTE:
THIS TABLE COMPILES THE DATA IN SECTION 4.303.1, AND IS INCLUDED AS A CONVENIENCE FOR THE USER.

TABLE - MAXIMUM FIXTURE WATER USE

FIXTURE TYPE	FLOW RATE
SHOWER HEADS (RESIDENTIAL)	1.8 GMP @ 80 PSI
LAVATORY FAUCETS (RESIDENTIAL)	MAX. 1.2 GPM @ 60 PSI MIN. 0.8 GPM @ 20 PSI
LAVATORY FAUCETS IN COMMON & PUBLIC USE AREAS	0.5 GPM @ 60 PSI
KITCHEN FAUCETS	1.8 GPM @ 60 PSI
METERING FAUCETS	0.2 GAL/CYCLE
WATER CLOSET	1.28 GAL/FLUSH
URINALS	0.125 GAL/FLUSH

4.304 OUTDOOR WATER USE
4.304.1 OUTDOOR POTABLE WATER USE IN LANDSCAPE AREAS. Residential developments shall comply with a local water efficient landscape ordinance or the current California Department of Water Resources' Model Water Efficient Landscape Ordinance (MWELO), whichever is more stringent.

NOTES:

1. The Model Water Efficient Landscape Ordinance (MWELO) is located in the *California Code Regulations,* Title 23, Chapter 2.7, Division 2. MWELO and supporting documents, including water budget calculator, are available at: https://www.water.ca.gov/

DIVISION 4.4 MATERIAL CONSERVATION AND RESOURCE EFFICIENCY

4.406 ENHANCED DURABILITY AND REDUCED MAINTENANCE
4.406.1 RODENT PROOFING. Annular spaces around pipes, electric cables, conduits or other openings in sole/bottom plates at exterior walls shall be protected against the passage of rodents by closing such openings with cement mortar, concrete masonry or a similar method acceptable to the enforcing agency.

4.408 CONSTRUCTION WASTE REDUCTION, DISPOSAL AND RECYCLING
4.408.1 CONSTRUCTION WASTE MANAGEMENT. Recycle and/or salvage for reuse a minimum of 65 percent of the non-hazardous construction and demolition waste in accordance with either Section 4.408.2, 4.408.3 or 4.408.4, or meet a more stringent local construction and demolition waste management ordinance.

Exceptions:

1. Excavated soil and land-clearing debris.
2. Alternate waste reduction methods developed by working with local agencies if diversion or recycle facilities capable of compliance with this item do not exist or are not located reasonably close to the jobsite.
3. The enforcing agency may make exceptions to the requirements of this section when isolated jobsites are located in areas beyond the haul boundaries of the diversion facility.

4.408.2 CONSTRUCTION WASTE MANAGEMENT PLAN. Submit a construction waste management plan in conformance with Items 1 through 5. The construction waste management plan shall be updated as necessary and shall be available during construction for examination by the enforcing agency.

1. Identify the construction and demolition waste materials to be diverted from disposal by recycling, reuse on the project or salvage for future use or sale.
2. Specify if construction and demolition waste materials will be sorted on-site (source separated) or bulk mixed (single stream).
3. Identify diversion facilities where the construction and demolition waste material collected will be taken.
4. Identify construction methods employed to reduce the amount of construction and demolition waste generated.
5. Specify that the amount of construction and demolition waste materials diverted shall be calculated by weight or volume, but not by both.

4.408.3 WASTE MANAGEMENT COMPANY. Utilize a waste management company, approved by the enforcing agency, which can provide verifiable documentation that the percentage of construction and demolition waste material diverted from the landfill complies with Section 4.408.1.

Note: The owner or contractor may make the determination if the construction and demolition waste materials will be diverted by a waste management company.

4.408.4 WASTE STREAM REDUCTION ALTERNATIVE [LR]. Projects that generate a total combined weight of construction and demolition waste disposed of in landfills, which do not exceed 3.4 lbs./sq.ft. of the building area shall meet the minimum 65% construction waste reduction requirement in Section 4.408.1

4.408.4.1 WASTE STREAM REDUCTION ALTERNATIVE. Projects that generate a total combined weight of construction and demolition waste disposed of in landfills, which do not exceed 2 pounds per square foot of the building area, shall meet the minimum 65% construction waste reduction requirement in Section 4.408.1

4.408.5 DOCUMENTATION. Documentation shall be provided to the enforcing agency which demonstrates compliance with Section 4.408.2, items 1 through 5, Section 4.408.3 or Section 4.408.4..

Notes:

1. Sample forms found in "A Guide to the California Green Building Standards Code (Residential)" located at www.hcd.ca.gov/CALGreen.html may be used to assist in documenting compliance with this section.
2. Mixed construction and demolition debris (C & D) processors can be located at the California Department of Resources Recycling and Recovery (CalRecycle).

4.410 BUILDING MAINTENANCE AND OPERATION
4.410.1 OPERATION AND MAINTENANCE MANUAL. At the time of final inspection, a manual, compact disc, web-based reference or other media acceptable to the enforcing agency which includes all of the following shall be placed in the building:

1. Directions to the owner or occupant that the manual shall remain with the building throughout the life cycle of the structure.
2. Operation and maintenance instructions for the following:
   a. Equipment and appliances, including water-saving devices and systems, HVAC systems, photovoltaic systems, electric vehicle chargers, water-heating systems and other major appliances and equipment.
   b. Roof and yard drainage, including gutters and downspouts.
   c. Space conditioning systems, including condensers and air filters.
   d. Landscape irrigation systems.
   e. Water reuse systems.
3. Information from local utility, water and waste recovery providers on methods to further reduce resource consumption, including recycle programs and locations.
4. Public transportation and/or carpool options available in the area.
5. Educational material on the positive impacts of an interior relative humidity between 30-60 percent and what methods an occupant may use to maintain the relative humidity level in that range.
6. Information about water-conserving landscape and irrigation design and controllers which conserve water.
7. Instructions for maintaining gutters and downspouts and the importance of diverting water at least 5 feet away from the foundation.
8. Information on required routine maintenance measures, including, but not limited to, caulking, painting, grading around the building, etc.
9. Information about state solar energy and incentive programs available.
10. A copy of all special inspections verifications required by the enforcing agency or this code.
11. Information from the Department of Forestry and Fire Protection on maintenance of defensible space around residential structures.
12. Information and/or drawings identifying the location of grab bar reinforcements.

4.410.2 RECYCLING BY OCCUPANTS. Where 5 or more multifamily dwelling units are constructed on a building site, provide readily accessible area(s) that serves all buildings on the site and are identified for the depositing, storage and collection of non-hazardous materials for recycling, including (at a minimum) paper, corrugated cardboard, glass, plastics, organic waster, and metals, or meet a lawfully enacted local recycling ordinance, if more restrictive.

Exception: Rural jurisdictions that meet and apply for the exemption in Public Resources Code Section 42649.82 (a)(2)(A) et seq. are note required to comply with the organic waste portion of this section.

DIVISION 4.5 ENVIRONMENTAL QUALITY

SECTION 4.501 GENERAL
4.501.1 Scope
The provisions of this chapter shall outline means of reducing the quality of air contaminants that are odorous, irritating and/or harmful to the comfort and well being of a building's installers, occupants and neighbors.

SECTION 4.502 DEFINITIONS
5.102.1 DEFINITIONS
The following terms are defined in Chapter 2 *(and are included here for reference)*

AGRIFIBER PRODUCTS. Agrifiber products include wheatboard, strawboard, panel substrates and door cores, not including furniture, fixtures and equipment (FF&E) not considered base building elements.

COMPOSITE WOOD PRODUCTS. Composite wood products include hardwood plywood, particleboard and medium density fiberboard. "Composite wood products" does not include hardboard, structural plywood, structural panels, structural composite lumber, oriented strand board, glued laminated timber, prefabricated wood I-joists or finger-jointed lumber, all as specified in California Code of regulations (CCR), title 17, Section 93120.1.

DIRECT-VENT APPLIANCE. A fuel-burning appliance with a sealed combustion system that draws all air for combustion from the outside atmosphere and discharges all flue gases to the outside atmosphere.

REV	DATE	DESCRIPTION	BY

DATE: 09/25/24
SCALE: As Noted

PREPARED BY:
PBPdrafting&design
pbpdrafting@aol.com

2924 Sierra St, Riverbank, CA 95367
Residence for Sammy Allatry
California Green Building Standards

CG-1

PBPDRAFTING EXPRESSLY RESERVES IT'S COMMON LAW COPYRIGHT AND OTHER PROPERTY RIGHTS IN THESE PLANS. THEY MAY NOT BE REPRODUCED, CHANGED, COPIED, ASSIGNED TO ANY OR USED FOR OTHER THAN THAT INTENDED WITHOUT FIRST OBTAINING THE WRITTEN PERMISSION AND CONSENT BY DESIGNER

Y = YES
N/A = NOT APPLICABLE
RESPON. PARTY = RESPONSIBLE PARTY (ie: ARCHITECT, ENGINEER, OWNER, CONTRACTOR, INSPECTOR ETC.)

MAXIMUM INCREMENTAL REACTIVITY (MIR). The maximum change in weight of ozone formed by adding a compound to the "Base Reactive Organic Gas (ROG) Mixture" per weight of compound added, expressed to hundredths of a gram (g O^3/g ROC).
Note: MIR values for individual compounds and hydrocarbon solvents are specified in CCR, Title 17, Sections 94700 and 94701.

MOISTURE CONTENT. The weight of the water in wood expressed in percentage of the weight of the oven-dry wood.

PRODUCT-WEIGHTED MIR (PWMIR). The sum of all weighted-MIR for all ingredients in a product subject to this article. The PWMIR is the total product reactivity expressed to hundredths of a gram of ozone formed per gram of product (excluding container and packaging).
Note: PWMIR is calculated according to equations found in CCR, Title 17, Section 94521 (a).

REACTIVE ORGANIC COMPOUND (ROC). Any compound that has the potential, once emitted, to contribute to ozone formation in the troposphere.

VOC. A volatile organic compound (VOC) broadly defined as a chemical compound based on carbon chains or rings with vapor pressures greater than 0.1 millimeters of mercury at room temperature. These compounds typically contain hydrogen and may contain oxygen, nitrogen and other elements. See CCR Title 17, Section 94508(a).

4.503 FIREPLACES
4.503.1 GENERAL. Any installed gas fireplace shall be a direct-vent sealed-combustion type. Any installed woodstove or pellet stove shall comply with U.S. EPA New Source Performance Standards (NSPS) emission limits as applicable, and shall have a permanent label indicating they are certified to meet the emission limits. Woodstoves, pellet stoves and fireplaces shall also comply with applicable local ordinances.

4.504 POLLUTANT CONTROL
4.504.1 COVERING OF DUCT OPENINGS & PROTECTION OF MECHANICAL EQUIPMENT DURING CONSTRUCTION. At the time of rough installation, during storage on the construction site and until final startup of the heating, cooling and ventilating equipment, all duct and other related air distribution component openings shall be covered with tape, plastic, sheet metal or other methods acceptable to the enforcing agency to reduce the amount of water, dust or debris which may enter the system.

4.504.2 FINISH MATERIAL POLLUTANT CONTROL. Finish materials shall comply with this section.

4.504.2.1 Adhesives, Sealants and Caulks. Adhesives, sealant and caulks used on the project shall meet the requirements of the following standards unless more stringent local or regional air pollution or air quality management district rules apply:

1. Adhesives, adhesive bonding primers, adhesive primers, sealants, sealant primers and caulks shall comply with local or regional air pollution control or air quality management district rules where applicable or SCAQMD Rule 1168 VOC limits, as shown in Table 4.504.1 or 4.504.2, as applicable. Such products also shall comply with the Rule 1168 prohibition on the use of certain toxic compounds (chloroform, ethylene dichloride, methylene chloride, perchloroethylene and tricloroethylene), except for aerosol products, as specified in Subsection 2 below.
2. Aerosol adhesives, and smaller unit sizes of adhesives, and sealant or caulking compounds (in units of product, less packaging, which do not weigh more than 1 pound and do not consist of more than 16 fluid ounces) shall comply with statewide VOC standards and other requirements, including prohibitions on use of certain toxic compounds, of *California Code of Regulations*, Title 17, commencing with section 94507.

4.504.2.2 Paints and Coatings. Architectural paints and coatings shall comply with VOC limits in Table 1 of the ARB Architectural Suggested Control Measure, as shown in Table 4.504.3, unless more stringent local limits apply. The VOC content limit for coatings that do not meet the definitions for the specialty coatings categories listed in Table 4.504.3 shall be determined by classifying the coating as a Flat, Nonflat or Nonflat-High Gloss coating, based on its gloss, as defined in subsections 4.21, 4.36, and 4.37 of the 2007 California Air Resources Board, Suggested Control Measure, and the corresponding Flat, Nonflat or Nonflat-High Gloss VOC limit in Table 4.504.3 shall apply.

4.504.2.3 Aerosol Paints and Coatings. Aerosol paints and coatings shall meet the Product-weighted MIR Limits for ROC in Section 94522(a)(2) and other requirements, including prohibitions on use of certain toxic compounds and ozone depleting substances, in Sections 94522(e)(1) and (f)(1) of *California Code of Regulations*, Title 17, commencing with Section 94520; and in areas under the jurisdiction of the Bay Area Air Quality Management District additionally comply with the percent VOC by weight of product limits of Regulation 8, Rule 49.

4.504.2.4 Verification. Verification of compliance with this section shall be provided at the request of the enforcing agency. Documentation may include, but is not limited to, the following:

1. Manufacturer's product specification.
2. Field verification of on-site product containers.

TABLE 4.504.1 - ADHESIVE VOC LIMIT[1,2]

(Less Water and Less Exempt Compounds in Grams per Liter)

ARCHITECTURAL APPLICATIONS	VOC LIMIT
INDOOR CARPET ADHESIVES	50
CARPET PAD ADHESIVES	50
OUTDOOR CARPET ADHESIVES	150
WOOD FLOORING ADHESIVES	100
RUBBER FLOOR ADHESIVES	60
SUBFLOOR ADHESIVES	50
CERAMIC TILE ADHESIVES	65
VCT & ASPHALT TILE ADHESIVES	50
DRYWALL & PANEL ADHESIVES	50
COVE BASE ADHESIVES	50
MULTIPURPOSE CONSTRUCTION ADHESIVE	70
STRUCTURAL GLAZING ADHESIVES	100
SINGLE-PLY ROOF MEMBRANE ADHESIVES	250
OTHER ADHESIVES NOT LISTED	50
SPECIALTY APPLICATIONS	
PVC WELDING	510
CPVC WELDING	490
ABS WELDING	325
PLASTIC CEMENT WELDING	250
ADHESIVE PRIMER FOR PLASTIC	550
CONTACT ADHESIVE	80
SPECIAL PURPOSE CONTACT ADHESIVE	250
STRUCTURAL WOOD MEMBER ADHESIVE	140
TOP & TRIM ADHESIVE	250
SUBSTRATE SPECIFIC APPLICATIONS	
METAL TO METAL	30
PLASTIC FOAMS	50
POROUS MATERIAL (EXCEPT WOOD)	50
WOOD	30
FIBERGLASS	80

1. IF AN ADHESIVE IS USED TO BOND DISSIMILAR SUBSTRATES TOGETHER, THE ADHESIVE WITH THE HIGHEST VOC CONTENT SHALL BE ALLOWED.

2. FOR ADDITIONAL INFORMATION REGARDING METHODS TO MEASURE THE VOC CONTENT SPECIFIED IN THIS TABLE, SEE SOUTH COAST AIR QUALITY MANAGEMENT DISTRICT RULE 1168.

TABLE 4.504.2 - SEALANT VOC LIMIT

(Less Water and Less Exempt Compounds in Grams per Liter)

SEALANTS	VOC LIMIT
ARCHITECTURAL	250
MARINE DECK	760
NONMEMBRANE ROOF	300
ROADWAY	250
SINGLE-PLY ROOF MEMBRANE	450
OTHER	420
SEALANT PRIMERS	
ARCHITECTURAL	
NON-POROUS	250
POROUS	775
MODIFIED BITUMINOUS	500
MARINE DECK	760
OTHER	750

TABLE 4.504.3 - VOC CONTENT LIMITS FOR ARCHITECTURAL COATINGS[2,3]

GRAMS OF VOC PER LITER OF COATING, LESS WATER & LESS EXEMPT COMPOUNDS

COATING CATEGORY	VOC LIMIT
FLAT COATINGS	50
NON-FLAT COATINGS	100
NONFLAT-HIGH GLOSS COATINGS	150
SPECIALTY COATINGS	
ALUMINUM ROOF COATINGS	400
BASEMENT SPECIALTY COATINGS	400
BITUMINOUS ROOF COATINGS	50
BITUMINOUS ROOF PRIMERS	350
BOND BREAKERS	350
CONCRETE CURING COMPOUNDS	350
CONCRETE/MASONRY SEALERS	100
DRIVEWAY SEALERS	50
DRY FOG COATINGS	150
FAUX FINISHING COATINGS	350
FIRE RESISTIVE COATINGS	350
FLOOR COATINGS	100
FORM-RELEASE COMPOUNDS	250
GRAPHIC ARTS COATINGS (SIGN PAINTS)	500
HIGH TEMPERATURE COATINGS	420
INDUSTRIAL MAINTENANCE COATINGS	250
LOW SOLIDS COATINGS[1]	120
MAGNESITE CEMENT COATINGS	450
MASTIC TEXTURE COATINGS	100
METALLIC PIGMENTED COATINGS	500
MULTICOLOR COATINGS	250
PRETREATMENT WASH PRIMERS	420
PRIMERS, SEALERS, & UNDERCOATERS	100
REACTIVE PENETRATING SEALERS	350
RECYCLED COATINGS	250
ROOF COATINGS	50
RUST PREVENTATIVE COATINGS	250
SHELLACS	
CLEAR	730
OPAQUE	550
SPECIALTY PRIMERS, SEALERS & UNDERCOATERS	100
STAINS	250
STONE CONSOLIDANTS	450
SWIMMING POOL COATINGS	340
TRAFFIC MARKING COATINGS	100
TUB & TILE REFINISH COATINGS	420
WATERPROOFING MEMBRANES	250
WOOD COATINGS	275
WOOD PRESERVATIVES	350
ZINC-RICH PRIMERS	340

1. GRAMS OF VOC PER LITER OF COATING, INCLUDING WATER & EXEMPT COMPOUNDS

2. THE SPECIFIED LIMITS REMAIN IN EFFECT UNLESS REVISED LIMITS ARE LISTED IN SUBSEQUENT COLUMNS IN THE TABLE.

3. VALUES IN THIS TABLE ARE DERIVED FROM THOSE SPECIFIED BY THE CALIFORNIA AIR RESOURCES BOARD, ARCHITECTURAL COATINGS SUGGESTED CONTROL MEASURE, FEB. 1, 2008. MORE INFORMATION IS AVAILABLE FROM THE AIR RESOURCES BOARD.

TABLE 4.504.5 - FORMALDEHYDE LIMITS[1]

MAXIMUM FORMALDEHYDE EMISSIONS IN PARTS PER MILLION

PRODUCT	CURRENT LIMIT
HARDWOOD PLYWOOD VENEER CORE	0.05
HARDWOOD PLYWOOD COMPOSITE CORE	0.05
PARTICLE BOARD	0.09
MEDIUM DENSITY FIBERBOARD	0.11
THIN MEDIUM DENSITY FIBERBOARD[2]	0.13

1. VALUES IN THIS TABLE ARE DERIVED FROM THOSE SPECIFIED BY THE CALIF. AIR RESOURCES BOARD, AIR TOXICS CONTROL MEASURE FOR COMPOSITE WOOD AS TESTED IN ACCORDANCE WITH ASTM E 1333. FOR ADDITIONAL INFORMATION, SEE CALIF. CODE OF REGULATIONS, TITLE 17, SECTIONS 93120 THROUGH 93120.12.

2. THIN MEDIUM DENSITY FIBERBOARD HAS A MAXIMUM THICKNESS OF 5/16" (8 MM).

DIVISION 4.5 ENVIRONMENTAL QUALITY (continued)
4.504.3 CARPET SYSTEMS. All carpet installed in the building interior shall meet the requirements of the California Department of Public Health, "Standard Method for the Testing and Evaluation of Volatile Organic Chemical Emissions from Indoor Sources Using Environmental Chambers," Version 1.2, January 2017 (Emission testing method for California Specification 01350)

See California Department of Public Health's website for certification programs and testing labs.

https://www.cdph.ca.gov/Programs/CCDPHP/DEODC/EHLB/IAQ/Pages/VOC.aspx.

4.504.3.1 Carpet cushion. All carpet cushion installed in the building interior shall meet the requirements of the California Department of Public Health, "Standard Method for the Testing and Evaluation of Volatile Organic Chemical Emissions from Indoor Sources Using Environmental Chambers," Version 1.2, January 2017 (Emission testing method for California Specification 01350)

See California Department of Public Health's website for certification programs and testing labs.

https://www.cdph.ca.gov/Programs/CCDPHP/DEODC/EHLB/IAQ/Pages/VOC.aspx.

4.504.3.2 Carpet adhesive. All carpet adhesive shall meet the requirements of Table 4.504.1.

4.504.4 RESILIENT FLOORING SYSTEMS. Where resilient flooring is installed , at least 80% of floor area receiving resilient flooring shall meet the requirements of the California Department of Public Health, "Standard Method for the Testing and Evaluation of Volatile Organic Chemical Emissions from Indoor Sources Using Environmental Chambers," Version 1.2, January 2017 (Emission testing method for California Specification 01350)

See California Department of Public Health's website for certification programs and testing labs.

hhttps://www.cdph.ca.gov/Programs/CCDPHP/DEODC/EHLB/IAQ/Pages/VOC.aspx.

4.504.5 COMPOSITE WOOD PRODUCTS. Hardwood plywood, particleboard and medium density fiberboard composite wood products used on the interior or exterior of the buildings shall meet the requirements for formaldehyde as specified in ARB's Air Toxics Control Measure for Composite Wood (17 CCR 93120 et seq.), by or before the dates specified in those sections, as shown in Table 4.504.5

4.504.5.1 Documentation. Verification of compliance with this section shall be provided as requested by the enforcing agency. Documentation shall include at least one of the following:

1. Product certifications and specifications.
2. Chain of custody certifications.
3. Product labeled and invoiced as meeting the Composite Wood Products regulation (see CCR, Title 17, Section 93120, et seq.).
4. Exterior grade products marked as meeting the PS-1 or PS-2 standards of the Engineered Wood Association, the Australian AS/NZS 2269, European 636 3S standards, and Canadian CSA 0121, CSA 0151, CSA 0153 and CSA 0325 standards.
5. Other methods acceptable to the enforcing agency.

4.505 INTERIOR MOISTURE CONTROL
4.505.1 General. Buildings shall meet or exceed the provisions of the *California Building Standards Code*.

4.505.2 CONCRETE SLAB FOUNDATIONS. Concrete slab foundations required to have a vapor retarder by California Building Code, Chapter 19, or concrete slab-on-ground floors required to have a vapor retarder by the California Residential Code, Chapter 5, shall also comply with this section.

4.505.2.1 Capillary break. A capillary break shall be installed in compliance with at least one of the following:

1. A 4-inch (101.6 mm) thick base of 1/2 inch (12.7mm) or larger clean aggregate shall be provided with a vapor barrier in direct contact with concrete and a concrete mix design, which will address bleeding, shrinkage, and curling, shall be used. For additional information, see American Concrete Institute, ACI 302.2R-06.
2. Other equivalent methods approved by the enforcing agency.
3. A slab design specified by a licensed design professional.

4.505.3 MOISTURE CONTENT OF BUILDING MATERIALS. Building materials with visible signs of water damage shall not be installed. Wall and floor framing shall not be enclosed when the framing members exceed 19 percent moisture content. Moisture content shall be verified in compliance with the following:

1. Moisture content shall be determined with either a probe-type or contact-type moisture meter.Equivalent moisture verification methods may be approved by the enforcing agency and shall satisfy requirements found in Section 101.8 of this code.
2. Moisture readings shall be taken at a point 2 feet (610 mm) to 4 feet (1219 mm) from the grade stamped end of each piece verified.
3. At least three random moisture readings shall be performed on wall and floor framing with documentation acceptable to the enforcing agency provided at the time of approval to enclose the wall and floor framing.

Insulation products which are visibly wet or have a high moisture content shall be replaced or allowed to dry prior to enclosure in wall or floor cavities. Wet-applied insulation products shall follow the manufacturers' drying recommendations prior to enclosure.

4.506 INDOOR AIR QUALITY AND EXHAUST
4.506.1 Bathroom exhaust fans. Each bathroom shall be mechanically ventilated and shall comply with the following:

1. Fans shall be ENERGY STAR compliant and be ducted to terminate outside the building.
2. Unless functioning as a component of a whole house ventilation system, fans must be controlled by a humidity control.
   a. Humidity controls shall be capable of adjustment between a relative humidity range less than or equal to 50% to a maximum of 80%. A humidity control may utilize manual or automatic means of adjustment.
   b. A humidity control may be a separate component to the exhaust fan and is not required to be integral (i.e., built-in)

Notes:

1. For the purposes of this section, a bathroom is a room which contains a bathtub, shower or tub/shower combination.
2. Lighting integral to bathroom exhaust fans shall comply with the *California Energy Code*.

4.507 ENVIRONMENTAL COMFORT
4.507.2 HEATING AND AIR-CONDITIONING SYSTEM DESIGN. Heating and air conditioning systems shall be sized, designed and have their equipment selected using the following methods:

1. The heat loss and heat gain is established according to ANSI/ACCA 2 Manual J - 2011 (Residential Load Calculation), ASHRAE handbooks or other equivalent design software or methods.
2. Duct systems are sized according to ANSI/ACCA 1 Manual D - 2014 (Residential Duct Systems), ASHRAE handbooks or other equivalent design software or methods.
3. Select heating and cooling equipment according to ANSI/ACCA 3 Manual S - 2014 (Residential Equipment Selection), or other equivalent design software or methods.

Exception: Use of alternate design temperatures necessary to ensure the system functions are acceptable.

CHAPTER 7
INSTALLER & SPECIAL INSPECTOR QUALIFICATIONS
702 QUALIFICATIONS
702.1 INSTALLER TRAINING. HVAC system installers shall be trained and certified in the proper installation of HVAC systems including ducts and equipment by a nationally or regionally recognized training or certification program. Uncertified persons may perform HVAC installations when under the direct supervision and responsibility of a person trained and certified to install HVAC systems or contractor licensed to install HVAC systems. Examples of acceptable HVAC training and certification programs include but are not limited to the following:

1. State certified apprenticeship programs.
2. Public utility training programs.
3. Training programs sponsored by trade, labor or statewide energy consulting or verification organizations.
4. Programs sponsored by manufacturing organizations.
5. Other programs acceptable to the enforcing agency.

702.2 SPECIAL INSPECTION [HCD]. When required by the enforcing agency, the owner or the responsible entity acting as the owner's agent shall employ one or more special inspectors to provide inspection or other duties necessary to substantiate compliance with this code. Special inspectors shall demonstrate competence to the satisfaction of the enforcing agency for the particular type of inspection or task to be performed. In addition to other certifications or qualifications acceptable to the enforcing agency, the following certifications or education may be considered by the enforcing agency when evaluating the qualifications of a special inspector:

1. Certification by a national or regional green building program or standard publisher.
2. Certification by a statewide energy consulting or verification organization, such as HERS raters, building performance contractors, and home energy auditors.
3. Successful completion of a third party apprentice training program in the appropriate trade.
4. Other programs acceptable to the enforcing agency.

Notes:

1. Special inspectors shall be independent entities with no financial interest in the materials or the project they are inspecting for compliance with this code.
2. HERS raters are special inspectors certified by the California Energy Commission (CEC) to rate homes in California according to the Home Energy Rating System (HERS).

[BSC] When required by the enforcing agency, the owner or the responsible entity acting as the owner's agent shall employ one or more special inspectors to provide inspection or other duties necessary to substantiate compliance with this code. Special inspectors shall demonstrate competence to the satisfaction of the enforcing agency for the particular type of inspection or task to be performed. In addition, the special inspector shall have a certification from a recognized state, national or international association, as determined by the local agency. The area of certification shall be closely related to the primary job function, as determined by the local agency.

Note: Special inspectors shall be independent entities with no financial interest in the materials or the project they are inspecting for compliance with this code.

703 VERIFICATIONS
703.1 DOCUMENTATION. Documentation used to show compliance with this code shall include but is not limited to, construction documents, plans, specifications, builder or installer certification, inspection reports, or other methods acceptable to the enforcing agency which demonstrate substantial conformance. When specific documentation or special inspection is necessary to verify compliance, that method of compliance will be specified in the appropriate section or identified applicable checklist.

REV	DATE	DESCRIPTION	BY

DATE: 09/25/24
SCALE: As Noted

PREPARED BY:
PBDrafting&design
pbdrafting@gmail.com

2924 Sierra St, Riverbank, CA 95367
Residence for Sammy Allatry
California Green Building Standards

CG-2

PBDRAFTING EXPRESSLY RESERVES ITS COMMON LAW COPYRIGHT AND OTHER PROPERTY RIGHTS IN THESE PLANS. THEY MAY NOT BE REPRODUCED, CHANGED, COPIED, ASSIGNED TO ANY OR USED FOR OTHER THAN THAT INTENDED WITHOUT FIRST OBTAINING THE WRITTEN PERMISSION AND CONSENT BY DESIGNER

PBPdrafting EXPRESSLY RESERVES ITS COMMON LAW COPYRIGHT AND OTHER PROPERTY RIGHTS IN THESE PLANS. THEY MAY NOT BE REPRODUCED CHANGED COPIED, ASSIGNED TO ANY OR USED FOR OTHER THAN THAT INTENDED WITHOUT FIRST OBTAINING THE WRITTEN PERMISSION AND CONSENT BY DESIGNER

CERTIFICATE OF COMPLIANCE - RESIDENTIAL PERFORMANCE COMPLIANCE METHOD **CF1R-PRF-01-E**

Project Name: Allatry-Unit-A **Calculation Date/Time:** 2024-10-19T15:39:35-07:00 **(Page 1 of 13)**

Calculation Description: Title 24 Analysis **Input File Name:** 20524-Unit-A.ribd22x

GENERAL INFORMATION

01	Project Name	Allatry-Unit-A		
02	Run Title	Title 24 Analysis		
03	Project Location	2924 Sierra Street		
04	City	Riverbank	05	Standards Version 2022
06	Zip code	95367	07	Software Version EnergyPro 9.3
08	Climate Zone 12		09	Front Orientation (deg/ Cardinal) 270
10	Building Type	Single family	11	Number of Dwelling Units 1
12	Project Scope	Newly Constructed	13	Number of Bedrooms 3
14	Addition Cond. Floor Area (ft^2)	0	15	Number of Stories 2
16	Existing Cond. Floor Area (ft^2)	n/a	17	Fenestration Average U-factor 0.3
18	Total Cond. Floor Area (ft^2)	1280	19	Glazing Percentage (%) 14.06%
20	ADU Bedroom Count	n/a	21	ADU Conditioned Floor Area n/a
22	Fuel Type	All electric	23	No Dwelling Units 1 No

COMPLIANCE RESULTS

01	Building Complies with Computer Performance
02	This building incorporates features that require field testing and/or verification by a certified HERS rater under the supervision of a CEC-approved HERS provider.
03	This building incorporates one or more Special Features shown below

CERTIFICATE OF COMPLIANCE - RESIDENTIAL PERFORMANCE COMPLIANCE METHOD **CF1R-PRF-01-E**

Project Name: Allatry-Unit-A **Calculation Date/Time:** 2024-10-19T15:39:35-07:00 **(Page 2 of 13)**

Calculation Description: Title 24 Analysis **Input File Name:** 20524-Unit-A.ribd22x

ENERGY DESIGN RATINGS

	Energy Design Ratings			Compliance Margins		
	Source Energy (EDR1)	Efficiency[1] EDR (EDR2efficiency)	Total[2] EDR (EDR2total)	Source Energy (EDR1)	Efficiency[1] EDR (EDR2efficiency)	Total[2] EDR (EDR2total)
Standard Design	34.3	34.4	31.7			
Proposed Design	29.9	33.6	31.2	4.4	0.8	0.5

RESULT[3] : PASS

[1]Efficiency EDR includes improvements like a better building envelope and more efficient equipment
[2]Total EDR includes efficiency and demand response measures such as photovoltaic (PV) system and batteries
[3]Building complies when source energy, efficiency and total compliance margins are greater than or equal to zero and unmet load hour limits are not exceeded

- Standard Design PV Capacity: 2.53 kWdc
- PV System resized to 2.53 kWdc (a factor of 2.526) to achieve "Standard Design PV" PV scaling

CERTIFICATE OF COMPLIANCE - RESIDENTIAL PERFORMANCE COMPLIANCE METHOD **CF1R-PRF-01-E**

Project Name: Allatry-Unit-A **Calculation Date/Time:** 2024-10-19T15:39:35-07:00 **(Page 3 of 13)**

Calculation Description: Title 24 Analysis **Input File Name:** 20524-Unit-A.ribd22x

ENERGY USE SUMMARY

Energy Use	Standard Design Source Energy (EDR1) (kBtu/ft^2 - yr)	Standard Design TDV Energy (EDR2) (kTDV/ft^2 -yr)	Proposed Design Source Energy (EDR1) (kBtu/ft^2 - yr)	Proposed Design TDV Energy (EDR2) (kTDV/ft^2 -yr)	Compliance Margin (EDR1)	Compliance Margin (EDR2)
Space Heating	4.71	31.91	3.49	26.81	1.22	5.1
Space Cooling	0.82	23.19	1.04	34.83	-0.22	-11.64
IAQ Ventilation	0.4	4.27	0.4	4.27	0	0
Water Heating	2.36	24.5	1.48	16.1	0.88	8.4
Self Utilization/Flexibility Credit			0	0	0	0
Efficiency Compliance Total	**8.29**	**83.87**	**6.41**	**82.01**	**1.88**	**1.86**
Photovoltaics	-1.61	-55.67	-1.61	-55.76		
Battery			0	0		
Flexibility			0			
Indoor Lighting	0.79	7.89	0.79	7.89		
Appl. & Cooking	3.11	38.6	3.09	38.42		
Plug Loads	4.26	44.41	4.26	44.41		
Outdoor Lighting	0.19	1.79	0.19	1.79		
TOTAL COMPLIANCE	**15.03**	**120.89**	**13.13**	**118.76**		

CERTIFICATE OF COMPLIANCE - RESIDENTIAL PERFORMANCE COMPLIANCE METHOD **CF1R-PRF-01-E**

Project Name: Allatry-Unit-A **Calculation Date/Time:** 2024-10-19T15:39:35-07:00 **(Page 4 of 13)**

Calculation Description: Title 24 Analysis **Input File Name:** 20524-Unit-A.ribd22x

ENERGY USE INTENSITY

	Standard Design (kBtu/ft^2 - yr)	Proposed Design (kBtu/ft^2 - yr)	Compliance Margin (kBtu/ft^2 - yr)	Margin Percentage
Gross EUI[1]	20.9	18.68	2.22	10.62
Net EUI[2]	10.37	8.15	2.22	21.41

Notes
1. Gross EUI is Energy Use Total (not including PV) / Total Building Area.
2. Net EUI is Energy Use Total (including PV) / Total Building Area.

REQUIRED PV SYSTEMS

01	02	03	04	05	06	07	08	09	10	11	12
DC System Size (kWdc)	Exception	Module Type	Array Type	Power Electronics	CFI	Azimuth (deg)	Tilt Input	Array Angle (deg)	Tilt: (x in 12)	Inverter Eff. (%)	Annual Solar Access (%)
2.53	NA	Standard (14-17%)	Fixed	none	true	150-270	n/a	n/a	<=7:12	96	98

REQUIRED SPECIAL FEATURES

The following are features that must be installed as condition for meeting the modeled energy performance for this computer analysis.

- Cool roof
- Window overhangs and/or fins
- Northwest Energy Efficiency Alliance (NEEA) rated heat pump water heater; specific brand/model, or equivalent, must be installed

CERTIFICATE OF COMPLIANCE - RESIDENTIAL PERFORMANCE COMPLIANCE METHOD **CF1R-PRF-01-E**

Project Name: Allatry-Unit-A **Calculation Date/Time:** 2024-10-19T15:39:35-07:00 **(Page 5 of 13)**

Calculation Description: Title 24 Analysis **Input File Name:** 20524-Unit-A.ribd22x

HERS FEATURE SUMMARY

The following is a summary of the features that must be field-verified by a certified HERS Rater as a condition for meeting the modeled energy performance for this computer analysis. Additional detail is provided in the building tables below. Registered CF2Rs and CF3Rs are required to be completed in the HERS Registry

- Quality Insulation Installation (QII)
- Indoor air quality ventilation
- Kitchen range hood
- Minimum Airflow
- Verified Refrigerant Charge
- Fan Efficacy Watts/CFM
- Verified HSPF2
- Verified heat pump rated heating capacity
- Duct leakage testing

BUILDING - FEATURES INFORMATION

01	02	03	04	05	06	07
Project Name	Conditioned Floor Area (ft^2)	Number of Dwelling Units	Number of Bedrooms	Number of Zones	Number of Ventilation Cooling Systems	Number of Water Heating Systems
Allatry-Unit-A	1280	1	3	2	0	1

ZONE INFORMATION

01	02	03	04	05	06	07
Zone Name	Zone Type	HVAC System Name	Zone Floor Area (ft^2)	Avg. Ceiling Height	Water Heating System 1	Status
1st Floor Zone (ZONE)	Conditioned	Res HVAC (SYSTEM)-1	636	9	DHW Sys 1	New
2nd Floor Zone (ZONE)	Conditioned	Res HVAC (SYSTEM)-1	644	9	DHW Sys 1	New

OPAQUE SURFACES

01	02	03	04	05	06	07	08
Name	Zone	Construction	Azimuth	Orientation	Gross Area (ft^2)	Window and Door Area (ft2)	Tilt (deg)
Front Wall/1	1st Floor Zone (ZONE)	R-21 Wall	270	Front	290	59	90
Left Wall/1	1st Floor Zone (ZONE)	R-15 Wall	0	Left	180	0	90
Back Wall/1	1st Floor Zone (ZONE)	R-21 Wall	90	Back	290	69.984	90

CERTIFICATE OF COMPLIANCE - RESIDENTIAL PERFORMANCE COMPLIANCE METHOD **CF1R-PRF-01-E**

Project Name: Allatry-Unit-A **Calculation Date/Time:** 2024-10-19T15:39:35-07:00 **(Page 6 of 13)**

Calculation Description: Title 24 Analysis **Input File Name:** 20524-Unit-A.ribd22x

OPAQUE SURFACES

01	02	03	04	05	06	07	08
Name	Zone	Construction	Azimuth	Orientation	Gross Area (ft^2)	Window and Door Area (ft2)	Tilt (deg)
Front Wall/2	2nd Floor Zone (ZONE)	R-21 Wall	270	Front	290	42	90
Left Wall/2	2nd Floor Zone (ZONE)	R-15 Wall	0	Left	180	15	90
BackWall/4	2nd Floor Zone (ZONE)	R-21 Wall	90	Back	290	18	90
Wall to Unit-B	1st Floor Zone (ZONE)>>1st Floor Zone (ZONE)	R-0 Wall	n/a	n/a	180	0	n/a
Wall to Unit-B 2	2nd Floor Zone (ZONE)>>2nd Floor Zone (ZONE)	R-0 Wall	n/a	n/a	180	0	n/a
Roof-2	2nd Floor Zone (ZONE)	R-38 Roof Attic	n/a	n/a	322	n/a	n/a
Roof-1	2nd Floor Zone (ZONE)	R-38 Roof Attic	n/a	n/a	322	n/a	n/a
Interior Surface-Attic ov	1st Floor Zone (ZONE)	Attic-R-0 - Attic	n/a	n/a	636	n/a	n/a

ATTIC

01	02	03	04	05	06	07	08
Name	Construction	Type	Roof Rise (x in 12)	Roof Reflectance	Roof Emittance	Radiant Barrier	Cool Roof
Attic 2nd Floor Zone (ZONE)	Attic Roof2nd Floor Zone (ZONE)	Ventilated	5	0.3	0.75	Yes	Yes

FENESTRATION / GLAZING

01	02	03	04	05	06	07	08	09	10	11	12	13	14
Name	Type	Surface	Orientation	Azimuth	Width (ft)	Height (ft)	Mult.	Area (ft^2)	U-factor	U-factor Source	SHGC	SHGC Source	Exterior Shading
3.0 x 5.0 Windows	Window	Front Wall/1	Front	270	3	5	1	15	0.3	NFRC	0.3	NFRC	Bug Screen
3.0 x 4.0 Windows	Window	Front Wall/1	Front	270	3	4	1	12	0.3	NFRC	0.3	NFRC	Bug Screen

CERTIFICATE OF COMPLIANCE - RESIDENTIAL PERFORMANCE COMPLIANCE METHOD **CF1R-PRF-01-E**

Project Name: Allatry-Unit-A **Calculation Date/Time:** 2024-10-19T15:39:35-07:00 **(Page 7 of 13)**

Calculation Description: Title 24 Analysis **Input File Name:** 20524-Unit-A.ribd22x

FENESTRATION / GLAZING

01	02	03	04	05	06	07	08	09	10	11	12	13	14
Name	Type	Surface	Orientation	Azimuth	Width (ft)	Height (ft)	Mult.	Area (ft^2)	U-factor	U-factor Source	SHGC	SHGC Source	Exterior Shading
2.0 x 4.0 Windows	Window	Front Wall/1	Front	270	2	4	1	8	0.3	NFRC	0.3	NFRC	Bug Screen
3.0 x 5.0 Window-B-2	Window	Back Wall/1	Back	90	3	5	2	30	0.3	NFRC	0.3	NFRC	Bug Screen
6.0 x 6.667 Slider	Window	Back Wall/1	Back	90	6	6.8	0	39.98	0.3	NFRC	0.3	NFRC	Bug Screen
3.0 x 5.0 Window-D-2	Window	Front Wall/2	Front	270	3	5	2	30	0.3	NFRC	0.3	NFRC	Bug Screen
3.0 x 3.0 Window -M	Window	Front Wall/2	Front	270	3	3	1	9	0.3	NFRC	0.3	NFRC	Bug Screen
3.0 x 1.0 Window -P	Window	Front Wall/2	Front	270	3	1	1	3	0.3	NFRC	0.3	NFRC	Bug Screen
3.0 x 5.0 New Window	Window	Left Wall/2	Left	0	3	5	1	15	0.3	NFRC	0.3	NFRC	Bug Screen
3.0 x 1.0 Window	Window	BackWall/4	Back	90	3	1	1	3	0.3	NFRC	0.3	NFRC	Bug Screen
3.0 x 5.0 New Window-R	Window	BackWall/4	Back	90	3	5	1	15	0.3	NFRC	0.3	NFRC	Bug Screen

OPAQUE DOORS

01	02	03	04
Name	Side of Building	Area (ft^2)	U-factor
Door-Entry	Front Wall/1	24	0.5

CERTIFICATE OF COMPLIANCE - RESIDENTIAL PERFORMANCE COMPLIANCE METHOD **CF1R-PRF-01-E**

Project Name: Allatry-Unit-A **Calculation Date/Time:** 2024-10-19T15:39:35-07:00 **(Page 8 of 13)**

Calculation Description: Title 24 Analysis **Input File Name:** 20524-Unit-A.ribd22x

OVERHANGS AND FINS

01	02	03	04	05	06	07	08	09	10	11	12	13	14
Window	Overhang					Left Fin				Right Fin			
	Depth	Dist Up	Left Extent	Right Extent	Flap Ht.	Depth	Top Up	Dist L	Bot Up	Depth	Top Up	Dist R	Bot Up
3.0 x 5.0 Windows	1.6	1	0	0	0	0	0	0	0	0	0	0	0
3.0 x 4.0 Windows	1.6	1	0	0	0	0	0	0	0	0	0	0	0
2.0 x 4.0 Windows	1.6	1	0	0	0	0	0	0	0	0	0	0	0
3.0 x 5.0 Window-B-2	1.6	1	0	0	0	0	0	0	0	0	0	0	0
6.0 x 6.667 Slider	1.6	1	0	0	0	0	0	0	0	0	0	0	0
3.0 x 5.0 Window-D-2	1.6	1	0	0	0	0	0	0	0	0	0	0	0
3.0 x 3.0 Window -M	1.6	1	0	0	0	0	0	0	0	0	0	0	0
3.0 x 1.0 Window -P	1.6	1	0	0	0	0	0	0	0	0	0	0	0
3.0 x 5.0 New Window	1.6	1	0	0	0	0	0	0	0	0	0	0	0
3.0 x 1.0 Window	1.6	1	0	0	0	0	0	0	0	0	0	0	0
3.0 x 5.0 New Window-R	1.6	1	0	0	0	0	0	0	0	0	0	0	0

SLAB FLOORS

01	02	03	04	05	06	07	08
Name	Zone	Area (ft^2)	Perimeter (ft)	Edge Insul. R-value and Depth	Edge Insul. R-value and Depth	Carpeted Fraction	Heated
Slab-on-Grade	1st Floor Zone (ZONE)	636	84.5	none	0	80%	No

REV/	DATE	DESCRIPTION	BY

DATE: 09/25/24

SCALE: As Noted

PREPARED BY:
PBPdrafting&design
pbpdrafting@aol.com

2924 Sierra St, Riverbank, CA 95367
Residence for Sammy Allatry

Energy Calculations

T24-A

PBPDRAFTING EXPRESSLY RESERVES ITS COMMON LAW COPYRIGHT AND OTHER PROPERTY RIGHTS IN THESE PLANS. THEY MAY NOT BE REPRODUCED, CHANGED, COPIED, ASSIGNED TO ANY OR USED FOR OTHER THAN THAT INTENDED WITHOUT FIRST OBTAINING THE WRITTEN PERMISSION AND CONSENT BY DESIGNER

CERTIFICATE OF COMPLIANCE - RESIDENTIAL PERFORMANCE COMPLIANCE METHOD **CF1R-PRF-01-E**

Project Name: Allatry-Unit-A **Calculation Date/Time:** 2024-10-19T15:39:35-07:00 **(Page 9 of 13)**

Calculation Description: Title 24 Analysis **Input File Name:** 20524-Unit-A.ribd22x

OPAQUE SURFACE CONSTRUCTIONS

01	02	03	04	05	06	07	08
Construction Name	**Surface Type**	**Construction Type**	**Framing**	**Total Cavity R-value**	**Interior / Exterior Continuous R-value**	**U-factor**	**Assembly Layers**
R-21 Wall	Exterior Walls	Wood Framed Wall	2x6 @ 16 in. O. C.	R-21	None / None	0.066	Inside Finish: Gypsum Board Cavity / Frame: R-21 / 2x6 Exterior Finish: Wood Siding/sheathing/decking
R-15 Wall	Exterior Walls	Wood Framed Wall	2x4 @ 16 in. O. C.	R-15	None / None	0.095	Inside Finish: Gypsum Board Cavity / Frame: R-15 / 2x4 Exterior Finish: 3 Coat Stucco
R-0 Wall	Interior Walls	Wood Framed Wall	2x4 @ 16 in. O. C.	R-0	None / None	0.277	Inside Finish: Gypsum Board Cavity / Frame: no insul. / 2x4 Other Side Finish: Gypsum Board
Attic Roof2nd Floor Zone (ZONE)	Attic Roofs	Wood Framed Ceiling	2x4 @ 24 in. O. C.	R-0	None / 0	0.644	Roofing: Light Roof (Asphalt Shingle) Roof Deck: Wood Siding/sheathing/decking Cavity / Frame: no insul. / 2x4
R-38 Roof Attic	Ceilings (below attic)	Wood Framed Ceiling	2x6 @ 16 in. O. C.	R-38	None / None	0.026	Over Ceiling Joists: R-23.7 Insul. Cavity / Frame: R-14.3 / 2x6 Inside Finish: Gypsum Board
Attic R-0 - Attic	Interior Ceiling	Wood Framed Ceiling	2x4 @ 16 in. O. C.	R-0	None / None	0.202	Floor Surface: Carpeted Floor Deck: Wood Siding/sheathing/decking Cavity / Frame: no insul. / 2x4 Ceiling Below Finish: Gypsum Board

BUILDING ENVELOPE - HERS VERIFICATION

01	02	03	04	05
Quality Insulation Installation (QII)	**High R-value Spray Foam Insulation**	**Building Envelope Air Leakage**	**CFM50**	**CFM50**
Required	Not Required	N/A	n/a	n/a

CERTIFICATE OF COMPLIANCE - RESIDENTIAL PERFORMANCE COMPLIANCE METHOD **CF1R-PRF-01-E**

Project Name: Allatry-Unit-A **Calculation Date/Time:** 2024-10-19T15:39:35-07:00 **(Page 10 of 13)**

Calculation Description: Title 24 Analysis **Input File Name:** 20524-Unit-A.ribd22x

WATER HEATING SYSTEMS

01	02	03	04	05	06	07	08	09
Name	**System Type**	**Distribution Type**	**Water Heater Name**	**Number of Units**	**Solar Heating System**	**Compact Distribution**	**HERS Verification**	**Water Heater Name (#)**
DHW Sys 1	Domestic Hot Water (DHW)	Standard	DHW Heater 1	1	n/a	None	n/a	DHW Heater 1 (1)

WATER HEATERS - NEEA HEAT PUMP

01	02	03	04	05	06	07	08
Name	**# of Units**	**Tank Vol. (gal)**	**NEEA Heat Pump Brand**	**NEEA Heat Pump Model**	**Tank Location**	**Duct Inlet Air Source**	**Duct Outlet Air Source**
DHW Heater 1	1	40	Rheem	Rheem HPLD40-1R9	Outside	2nd Floor Zone (ZONE)	2nd Floor Zone (ZONE)

WATER HEATING - HERS VERIFICATION

01	02	03	04	05	06	07
Name	**Pipe Insulation**	**Parallel Piping**	**Compact Distribution**	**Compact Distribution Type**	**Recirculation Control**	**Shower Drain Water Heat Recovery**
DHW Sys 1 - 1/1	Not Required	Not Required	Not Required	None	Not Required	Not Required

SPACE CONDITIONING SYSTEMS

01	02	03	04	05	06	07	08	09
Name	**System Type**	**Heating Unit Name**	**Heating Equipment Count**	**Cooling Unit Name**	**Cooling Equipment Count**	**Fan Name**	**Distribution Name**	**Required Thermostat Type**
Res HVAC (SYSTEM)-1	Heat pump heating cooling	Heat Pump System 1	1	Heat Pump System 1	1	HVAC Fan 1	Air Distribution System 1	Setback

CERTIFICATE OF COMPLIANCE - RESIDENTIAL PERFORMANCE COMPLIANCE METHOD **CF1R-PRF-01-E**

Project Name: Allatry-Unit-A **Calculation Date/Time:** 2024-10-19T15:39:35-07:00 **(Page 11 of 13)**

Calculation Description: Title 24 Analysis **Input File Name:** 20524-Unit-A.ribd22x

HVAC - HEAT PUMPS

01	02	03	04	05	06	07	08	09	10	11	12	13
			Heating				Cooling					
Name	**System Type**	**Number of Units**	**Heating Efficiency Type**	**HSPF/VS PF2/COP**	**Cap 47**	**Cap 17**	**Cooling Efficiency Type**	**SEER/SEER2**	**EER/EER2/CEER**	**Zonally Controlled**	**Compressor Type**	**HERS Verification**
Heat Pump System 1	Central split HP	1	HSPF2	8.5	32000	20000	EER2SEER2	14	11.5	Not Zonal	Single Speed	Heat Pump System 1-hers-htpump

HVAC HEAT PUMPS - HERS VERIFICATION

01	02	03	04	05	06	07	08	09
Name	**Verified Airflow**	**Airflow Target**	**Verified EER/EER2**	**Verified SEER/SEER2**	**Verified Refrigerant Charge**	**Verified HSPF/HSPF2**	**Verified Heating Cap 47**	**Verified Heating Cap 17**
Heat Pump System 1-hers-htpump	Required	350	Not Required	Not Required	Yes	Yes	Yes	Yes

HVAC - DISTRIBUTION SYSTEMS

01	02	03	04	05	06	07	08	09	10	11	12
			Duct Ins. R-value		Duct Location		Surface Area				
Name	**Type**	**Design Type**	**Supply**	**Return**	**Supply**	**Return**	**Supply**	**Return**	**Bypass Duct**	**Duct Leakage**	**HERS Verification**
Air Distribution System 1	Unconditioned attic	Non-Verified	R-8	R-8	Attic	Attic	n/a	n/a	No Bypass Duct	Sealed and Tested	Air Distribution System 1-hers-dist

CERTIFICATE OF COMPLIANCE - RESIDENTIAL PERFORMANCE COMPLIANCE METHOD **CF1R-PRF-01-E**

Project Name: Allatry-Unit-A **Calculation Date/Time:** 2024-10-19T15:39:35-07:00 **(Page 12 of 13)**

Calculation Description: Title 24 Analysis **Input File Name:** 20524-Unit-A.ribd22x

HVAC DISTRIBUTION - HERS VERIFICATION

01	02	03	04	05	06	07	08	09
Name	**Duct Leakage Verification**	**Duct Leakage Target (%)**	**Verified Duct Location**	**Verified Duct Design**	**Buried Ducts**	**Deeply Buried Ducts**	**Low-leakage Air Handler**	**Low Leakage Ducts Entirely in Conditioned Space**
Air Distribution System 1-hers-dist	Yes	5.0	Not Required	Not Required	Not Required	Credit not taken	Not Required	No

HVAC - FAN SYSTEMS

01	02	03	04
Name	**Type**	**Fan Power (Watts/CFM)**	**Name**
HVAC Fan 1	HVAC Fan	0.45	HVAC Fan 1-hers-fan

HVAC FAN SYSTEMS - HERS VERIFICATION

01	02	03
Name	**Verified Fan Watt Draw**	**Required Fan Efficacy (Watts/CFM)**
HVAC Fan 1-hers-fan	Required	0.45

INDOOR AIR QUALITY (IAQ) FANS

01	02	03	04	05	06	07	08	09
Dwelling Unit	**Airflow (CFM)**	**Fan Efficacy (W/CFM)**	**IAQ Fan Type**	**Includes Heat/Energy Recovery?**	**IAQ Recovery Effectiveness - SRE/ASRE**	**Includes Fault Indicator Display?**	**HERS Verification**	**Status**
SFam IAQVentRpt	66	0.35	Exhaust	No	n/a / n/a	No	Yes	

CERTIFICATE OF COMPLIANCE - RESIDENTIAL PERFORMANCE COMPLIANCE METHOD **CF1R-PRF-01-E**

Project Name: Allatry-Unit-A **Calculation Date/Time:** 2024-10-19T15:39:35-07:00 **(Page 13 of 13)**

Calculation Description: Title 24 Analysis **Input File Name:** 20524-Unit-A.ribd22x

DOCUMENTATION AUTHOR'S DECLARATION STATEMENT

1. I certify that this Certificate of Compliance documentation is accurate and complete.

Documentation Author Name: RONALD ALLEN	Documentation Author Signature: RONALD ALLEN
Company: vector consulting	Signature Date: 10/19/2024
Address: 4309 Main St	CEA/ HERS Certification Identification (if applicable): N/a
City/State/Zip: Denair, CA 95316	Phone: 2095354650

CABEC CERTIFIED ENERGY ANALYST

RESPONSIBLE PERSON'S DECLARATION STATEMENT

I certify the following under penalty of perjury, under the laws of the State of California:

1. I am eligible under Division 3 of the Business and Professions Code to accept responsibility for the building design identified on this Certificate of Compliance.
2. I certify that the energy features and performance specifications identified on this Certificate of Compliance conform to the requirements of Title 24, Part 1 and Part 6 of the California Code of Regulations.
3. The building design features or system design features identified on this Certificate of Compliance are consistent with the information provided on other applicable compliance documents, worksheets, calculations, plans and specifications submitted to the enforcement agency for approval with this building permit application.

Responsible Designer Name: RONALD ALLEN	Responsible Designer Signature: RONALD ALLEN
Company: vector consulting	Date Signed: 10/19/2024
Address: 4309 Main St	License:
City/State/Zip: Denair, CA 95316	Phone: 2095354650

Digitally signed by California Home Energy Efficiency Rating Services (CHEERS). This digital signature is provided in order to secure the content of this registered document, and in no way implies Registration Provider responsibility for the accuracy of the information.

REV	DATE	DESCRIPTION	BY

DATE: 09/25/24

SCALE: As Noted

PREPARED BY:

PBPdrafting&design
pbpdrafting@ool.com

2924 Sierra St, Riverbank, CA 95367
Residence for Sammy Allatry

Energy Calculations

T24-A

PBDRAFTING EXPRESSLY RESERVES ITS COMMON LAW COPYRIGHT AND OTHER PROPERTY RIGHTS IN THESE PLANS. THEY MAY NOT BE REPRODUCED, CHANGED, COPIED, ASSIGNED TO ANY OR USED FOR OTHER THAN THAT INTENDED WITHOUT FIRST OBTAINING THE WRITTEN PERMISSION AND CONSENT BY DESIGNER

CERTIFICATE OF COMPLIANCE - RESIDENTIAL PERFORMANCE COMPLIANCE METHOD **CF1R-PRF-01-E**

Project Name: Allatry-Unit-B **Calculation Date/Time:** 2024-10-19T15:54:18-07:00 **(Page 1 of 14)**
Calculation Description: Title 24 Analysis **Input File Name:** 20524-Unit-B.ribd22x

GENERAL INFORMATION					
01	Project Name	Allatry-Unit-B			
02	Run Title	Title 24 Analysis			
03	Project Location	2924 Sierra Street			
04	City	Riverbank	05	Standards Version	2022
06	Zip code	95367	07	Software Version	EnergyPro 9.3
08	Climate Zone	12	09	Front Orientation (deg/ Cardinal)	0
10	Building Type	Single family	11	Number of Dwelling Units	1
12	Project Scope	Newly Constructed	13	Number of Bedrooms	3
14	Addition Cond. Floor Area (ft²)	0	15	Number of Stories	2
16	Existing Cond. Floor Area (ft²)	n/a	17	Fenestration Average U-factor	0.3
18	Total Cond. Floor Area (ft²)	1780	19	Glazing Percentage (%)	14.69%
20	ADU Bedroom Count	n/a	21	ADU Conditioned Floor Area	n/a
22	Fuel Type	All electric	23	No Dwelling Unit:	No

COMPLIANCE RESULTS	
01	Building Complies with Computer Performance
02	This building incorporates features that require field testing and/or verification by a certified HERS rater under the supervision of a CEC-approved HERS provider.
03	This building incorporates one or more Special Features shown below

CERTIFICATE OF COMPLIANCE - RESIDENTIAL PERFORMANCE COMPLIANCE METHOD **CF1R-PRF-01-E**

Project Name: Allatry-Unit-B **Calculation Date/Time:** 2024-10-19T15:54:18-07:00 **(Page 2 of 14)**
Calculation Description: Title 24 Analysis **Input File Name:** 20524-Unit-B.ribd22x

ENERGY DESIGN RATINGS	Energy Design Ratings			Compliance Margins		
	Source Energy (EDR1)	Efficiency[1] EDR (EDR2efficiency)	Total[2] EDR (EDR2total)	Source Energy (EDR1)	Efficiency[1] EDR (EDR2efficiency)	Total[2] EDR (EDR2total)
Standard Design	34.3	34.5	31.7			
Proposed Design	28.5	28.7	28.1	5.8	5.8	3.6

RESULT[3] : PASS

[1]Efficiency EDR includes improvements like a better building envelope and more efficient equipment
[2]Total EDR includes efficiency and demand response measures such as photovoltaic (PV) system and batteries
[3]Building complies when source energy, efficiency and total compliance margins are greater than or equal to zero and unmet load hour limits are not exceeded

- Standard Design PV Capacity: 2.52 kWdc
- PV System resized to 2.52 kWdc (a factor of 2.524) to achieve "Standard Design PV" PV scaling

Registration Number: 424-P010253873A-000-000-0000000-0000 Registration Date/Time: 10/19/2024 15:59 HERS Provider: CHEERS
Reliance is hereby expressly granted to California Home Energy Efficiency Rating Services (CHEERS) using information uploaded by third parties not affiliated with or related to CHEERS. Therefore, CHEERS is not responsible for, and cannot guarantee, the accuracy or completeness of the information contained in this document.
CA Building Energy Efficiency Standards - 2022 Residential Compliance Report Version: 2022.0.000 Report Generated: 2024-10-19 15:55:03
Schema Version: rev 20220901

CERTIFICATE OF COMPLIANCE - RESIDENTIAL PERFORMANCE COMPLIANCE METHOD **CF1R-PRF-01-E**

Project Name: Allatry-Unit-B **Calculation Date/Time:** 2024-10-19T15:54:18-07:00 **(Page 3 of 14)**
Calculation Description: Title 24 Analysis **Input File Name:** 20524-Unit-B.ribd22x

ENERGY USE SUMMARY						
Energy Use	Standard Design Source Energy (EDR1) (kBtu/ft² -yr)	Standard Design TDV Energy (EDR2) (kTDV/ft² -yr)	Proposed Design Source Energy (EDR1) (kBtu/ft² -yr)	Proposed Design TDV Energy (EDR2) (kTDV/ft² -yr)	Compliance Margin (EDR1)	Compliance Margin (EDR2)
Space Heating	4.35	29.42	2.91	22.56	1.44	6.86
Space Cooling	0.81	22.96	0.7	24.75	0.11	-1.79
IAQ Ventilation	0.4	4.27	0.4	4.27	0	0
Water Heating	2.36	24.5	1.48	16.12	0.88	8.38
Self Utilization/Flexibility Credit			0	0	0	0
Efficiency Compliance Total	**7.92**	**81.15**	**5.49**	**67.7**	**2.43**	**13.45**
Photovoltaics	-1.61	-55.64	-1.61	-55.5		
Battery			0	0		
Flexibility			0			
Indoor Lighting	0.79	7.89	0.79	7.89		
Appl. & Cooking	3.11	38.6	3.09	38.4		
Plug Loads	4.26	44.41	4.26	44.41		
Outdoor Lighting	0.19	1.79	0.19	1.79		
TOTAL COMPLIANCE	**14.66**	**118.2**	**12.21**	**104.69**		

Registration Number: 424-P010253873A-000-000-0000000-0000 Registration Date/Time: 10/19/2024 15:59 HERS Provider: CHEERS
Reliance is hereby expressly granted to California Home Energy Efficiency Rating Services (CHEERS) using information uploaded by third parties not affiliated with or related to CHEERS. Therefore, CHEERS is not responsible for, and cannot guarantee, the accuracy or completeness of the information contained in this document.
CA Building Energy Efficiency Standards - 2022 Residential Compliance Report Version: 2022.0.000 Report Generated: 2024-10-19 15:55:03
Schema Version: rev 20220901

CERTIFICATE OF COMPLIANCE - RESIDENTIAL PERFORMANCE COMPLIANCE METHOD **CF1R-PRF-01-E**

Project Name: Allatry-Unit-B **Calculation Date/Time:** 2024-10-19T15:54:18-07:00 **(Page 4 of 14)**
Calculation Description: Title 24 Analysis **Input File Name:** 20524-Unit-B.ribd22x

ENERGY USE INTENSITY	Standard Design (kBtu/ft² - yr)	Proposed Design (kBtu/ft² - yr)	Compliance Margin (kBtu/ft² - yr)	Margin Percentage
Gross EUI[1]	20.53	17.61	2.92	14.22
Net EUI[2]	10.01	7.08	2.93	29.27

Notes
1. Gross EUI is Energy Use Total (not including PV) / Total Building Area.
2. Net EUI is Energy Use Total (including PV) / Total Building Area.

REQUIRED PV SYSTEMS											
01	02	03	04	05	06	07	08	09	10	11	12
DC System Size (kWdc)	Exception	Module Type	Array Type	Power Electronics	CFI	Azimuth (deg)	Tilt Input	Array Angle (deg)	Tilt: (x in 12)	Inverter Eff. (%)	Annual Solar Access (%)
2.52	NA	Standard (14-17%)	Fixed	none	true	150-270	n/a	n/a	<=7:12	96	98

REQUIRED SPECIAL FEATURES
The following are features that must be installed as condition for meeting the modeled energy performance for this computer analysis.
• Cool roof
• Window overhangs and/or fins
• Northwest Energy Efficiency Alliance (NEEA) rated heat pump water heater; specific brand/model, or equivalent, must be installed

Registration Number: 424-P010253873A-000-000-0000000-0000 Registration Date/Time: 10/19/2024 15:59 HERS Provider: CHEERS
Reliance is hereby expressly granted to California Home Energy Efficiency Rating Services (CHEERS) using information uploaded by third parties not affiliated with or related to CHEERS. Therefore, CHEERS is not responsible for, and cannot guarantee, the accuracy or completeness of the information contained in this document.
CA Building Energy Efficiency Standards - 2022 Residential Compliance Report Version: 2022.0.000 Report Generated: 2024-10-19 15:55:03
Schema Version: rev 20220901

CERTIFICATE OF COMPLIANCE - RESIDENTIAL PERFORMANCE COMPLIANCE METHOD **CF1R-PRF-01-E**

Project Name: Allatry-Unit-B **Calculation Date/Time:** 2024-10-19T15:54:18-07:00 **(Page 5 of 14)**
Calculation Description: Title 24 Analysis **Input File Name:** 20524-Unit-B.ribd22x

HERS FEATURE SUMMARY
The following is a summary of the features that must be field-verified by a certified HERS Rater as a condition for meeting the modeled energy performance for this computer analysis. Additional detail is provided in the building tables below. Registered CF2Rs and CF3Rs are required to be completed in the HERS Registry
• Quality Insulation Installation (QII)
• Indoor air quality ventilation
• Kitchen range hood
• Minimum Airflow
• Verified Refrigerant Charge
• Fan Efficacy Watts/CFM
• Verified HSPF2
• Verified heat pump rated heating capacity
• Duct leakage testing

BUILDING - FEATURES INFORMATION						
01	02	03	04	05	06	07
Project Name	Conditioned Floor Area (ft²)	Number of Dwelling Units	Number of Bedrooms	Number of Zones	Number of Ventilation Cooling Systems	Number of Water Heating Systems
Allatry-Unit-B	1280	1	3	2	0	1

ZONE INFORMATION						
01	02	03	04	05	06	07
Zone Name	Zone Type	HVAC System Name	Zone Floor Area (ft²)	Avg. Ceiling Height	Water Heating System 1	Status
1st Floor Zone (ZONE)	Conditioned	Res HVAC (SYSTEM)-1	636	9	DHW Sys 1	New
2nd Floor Zone (ZONE)	Conditioned	Res HVAC (SYSTEM)-1	644	9	DHW Sys 1	New

OPAQUE SURFACES							
01	02	03	04	05	06	07	08
Name	Zone	Construction	Azimuth	Orientation	Gross Area (ft²)	Window and Door Area (ft2)	Tilt (deg)
Front Wall/1	1st Floor Zone (ZONE)	R-21 Wall	0	Front	290	59	90
Back Wall/1	1st Floor Zone (ZONE)	R-21 Wall	180	Back	290	69.984	90
Front Wall/2	2nd Floor Zone (ZONE)	R-21 Wall	0	Front	290	42	90

Registration Number: 424-P010253873A-000-000-0000000-0000 Registration Date/Time: 10/19/2024 15:59 HERS Provider: CHEERS
Reliance is hereby expressly granted to California Home Energy Efficiency Rating Services (CHEERS) using information uploaded by third parties not affiliated with or related to CHEERS. Therefore, CHEERS is not responsible for, and cannot guarantee, the accuracy or completeness of the information contained in this document.
CA Building Energy Efficiency Standards - 2022 Residential Compliance Report Version: 2022.0.000 Report Generated: 2024-10-19 15:55:03
Schema Version: rev 20220901

CERTIFICATE OF COMPLIANCE - RESIDENTIAL PERFORMANCE COMPLIANCE METHOD **CF1R-PRF-01-E**

Project Name: Allatry-Unit-B **Calculation Date/Time:** 2024-10-19T15:54:18-07:00 **(Page 6 of 14)**
Calculation Description: Title 24 Analysis **Input File Name:** 20524-Unit-B.ribd22x

OPAQUE SURFACES							
01	02	03	04	05	06	07	08
Name	Zone	Construction	Azimuth	Orientation	Gross Area (ft²)	Window and Door Area (ft2)	Tilt (deg)
Right Wall/2	2nd Floor Zone (ZONE)	R-15 Wall	270	Right	180	23	90
BackWall/4	2nd Floor Zone (ZONE)	R-21 Wall	180	Back	290	18	90
Wall to Unit-A	1st Floor Zone (ZONE)>>1st Floor Zone (ZONE)	R-0 Wall	n/a	n/a	180	0	n/a
Wall to Unit-C	1st Floor Zone (ZONE)>>1st Floor Zone (ZONE)	R-0 Wall	n/a	n/a	180	0	n/a
Wall to Unit-B	2nd Floor Zone (ZONE)>>2nd Floor Zone (ZONE)	R-0 Wall	n/a	n/a	180	0	n/a
Roof-2	2nd Floor Zone (ZONE)	R-38 Roof Attic	n/a	n/a	322	n/a	n/a
Roof-1	2nd Floor Zone (ZONE)	R-38 Roof Attic	n/a	n/a	322	n/a	n/a
Interior Surface-Attic ov	1st Floor Zone (ZONE)	Attic-R-0 - Attic	n/a	n/a	636	n/a	n/a

ATTIC							
01	02	03	04	05	06	07	08
Name	Construction	Type	Roof Rise (x in 12)	Roof Reflectance	Roof Emittance	Radiant Barrier	Cool Roof
Attic 2nd Floor Zone (ZONE)	Attic Roof2nd Floor Zone (ZONE)	Ventilated	5	0.3	0.75	Yes	Yes

FENESTRATION / GLAZING														
01	02	03	04	05	06	07	08	09	10	11	12	13	14	
Name	Type	Surface	Orientation	Azimuth	Width (ft)	Height (ft)	Mult.	Area (ft²)	U-factor	U-factor Source	SHGC	SHGC Source	Exterior Shading	
3.0 x 5.0 Windows	Window	Front Wall/1	Front	0	3	5	1	15	0.3	NFRC	0.3	NFRC	Bug Screen	

Registration Number: 424-P010253873A-000-000-0000000-0000 Registration Date/Time: 10/19/2024 15:59 HERS Provider: CHEERS
Reliance is hereby expressly granted to California Home Energy Efficiency Rating Services (CHEERS) using information uploaded by third parties not affiliated with or related to CHEERS. Therefore, CHEERS is not responsible for, and cannot guarantee, the accuracy or completeness of the information contained in this document.
CA Building Energy Efficiency Standards - 2022 Residential Compliance Report Version: 2022.0.000 Report Generated: 2024-10-19 15:55:03
Schema Version: rev 20220901

CERTIFICATE OF COMPLIANCE - RESIDENTIAL PERFORMANCE COMPLIANCE METHOD **CF1R-PRF-01-E**

Project Name: Allatry-Unit-B **Calculation Date/Time:** 2024-10-19T15:54:18-07:00 **(Page 7 of 14)**
Calculation Description: Title 24 Analysis **Input File Name:** 20524-Unit-B.ribd22x

FENESTRATION / GLAZING														
01	02	03	04	05	06	07	08	09	10	11	12	13	14	
Name	Type	Surface	Orientation	Azimuth	Width (ft)	Height (ft)	Mult.	Area (ft²)	U-factor	U-factor Source	SHGC	SHGC Source	Exterior Shading	
3.0 x 4.0 Windows	Window	Front Wall/1	Front	0	3	4	1	12	0.3	NFRC	0.3	NFRC	Bug Screen	
2.0 x 4.0 Windows	Window	Front Wall/1	Front	0	2	4	1	8	0.3	NFRC	0.3	NFRC	Bug Screen	
3.0 x 5.0 Window-B-2	Window	Back Wall/1	Back	180	3	5	2	30	0.3	NFRC	0.3	NFRC	Bug Screen	
6.0 x 6.667 Slider	Window	Back Wall/1	Back	180	6	6.8	0	39.98	0.3	NFRC	0.3	NFRC	Bug Screen	
3.0 x 5.0 Window-D-2	Window	Front Wall/2	Front	0	3	5	2	30	0.3	NFRC	0.3	NFRC	Bug Screen	
3.0 x 3.0 Window -M	Window	Front Wall/2	Front	0	3	3	1	9	0.3	NFRC	0.3	NFRC	Bug Screen	
3.0 x 1.0 Window -P	Window	Front Wall/2	Front	0	3	1	1	3	0.3	NFRC	0.3	NFRC	Bug Screen	
3.0 x 5.0 New Window	Window	Right Wall/2	Right	270	3	5	1	15	0.3	NFRC	0.3	NFRC	Bug Screen	
2.0 x 4.0 New Window	Window	Right Wall/2	Right	270	2	4	1	8	0.3	NFRC	0.3	NFRC	Bug Screen	
3.0 x 1.0 Window	Window	BackWall/4	Back	180	3	1	1	3	0.3	NFRC	0.3	NFRC	Bug Screen	
3.0 x 5.0 New Window-R	Window	BackWall/4	Back	180	3	5	1	15	0.3	NFRC	0.3	NFRC	Bug Screen	

Registration Number: 424-P010253873A-000-000-0000000-0000 Registration Date/Time: 10/19/2024 15:59 HERS Provider: CHEERS
Reliance is hereby expressly granted to California Home Energy Efficiency Rating Services (CHEERS) using information uploaded by third parties not affiliated with or related to CHEERS. Therefore, CHEERS is not responsible for, and cannot guarantee, the accuracy or completeness of the information contained in this document.
CA Building Energy Efficiency Standards - 2022 Residential Compliance Report Version: 2022.0.000 Report Generated: 2024-10-19 15:55:03
Schema Version: rev 20220901

CERTIFICATE OF COMPLIANCE - RESIDENTIAL PERFORMANCE COMPLIANCE METHOD **CF1R-PRF-01-E**

Project Name: Allatry-Unit-B **Calculation Date/Time:** 2024-10-19T15:54:18-07:00 **(Page 8 of 14)**
Calculation Description: Title 24 Analysis **Input File Name:** 20524-Unit-B.ribd22x

OPAQUE DOORS			
01	02	03	04
Name	Side of Building	Area (ft²)	U-factor
Door-Entry	Front Wall/1	24	0.5

OVERHANGS AND FINS													
01	02	03	04	05	06	07	08	09	10	11	12	13	14
Window	Overhang					Left Fin			Right Fin				
	Depth	Dist Up	Left Extent	Right Extent	Flap Ht.	Depth	Top Up	Dist L	Bot Up	Depth	Top Up	Dist R	Bot Up
3.0 x 5.0 Windows	1.6	1	0	0	0	0	0	0	0	0	0	0	0
3.0 x 4.0 Windows	1.6	1	0	0	0	0	0	0	0	0	0	0	0
2.0 x 4.0 Windows	1.6	1	0	0	0	0	0	0	0	0	0	0	0
3.0 x 5.0 Window-B-2	1.6	1	0	0	0	0	0	0	0	0	0	0	0
6.0 x 6.667 Slider	1.6	1	0	0	0	0	0	0	0	0	0	0	0
3.0 x 5.0 Window-D-2	1.6	1	0	0	0	0	0	0	0	0	0	0	0
3.0 x 3.0 Window -M	1.6	1	0	0	0	0	0	0	0	0	0	0	0
3.0 x 1.0 Window -P	1.6	1	0	0	0	0	0	0	0	0	0	0	0
3.0 x 5.0 New Window	1.6	1	0	0	0	0	0	0	0	0	0	0	0
2.0 x 4.0 New Window	1.6	1	0	0	0	0	0	0	0	0	0	0	0
3.0 x 1.0 Window	1.6	1	0	0	0	0	0	0	0	0	0	0	0
3.0 x 5.0 New Window-R	1.6	1	0	0	0	0	0	0	0	0	0	0	0

Registration Number: 424-P010253873A-000-000-0000000-0000 Registration Date/Time: 10/19/2024 15:59 HERS Provider: CHEERS
Reliance is hereby expressly granted to California Home Energy Efficiency Rating Services (CHEERS) using information uploaded by third parties not affiliated with or related to CHEERS. Therefore, CHEERS is not responsible for, and cannot guarantee, the accuracy or completeness of the information contained in this document.
CA Building Energy Efficiency Standards - 2022 Residential Compliance Report Version: 2022.0.000 Report Generated: 2024-10-19 15:55:03
Schema Version: rev 20220901

REV/	DATE	DESCRIPTION	BY

DATE: 09/25/24

SCALE: As Noted

PREPARED BY:

PBDrafting&design
pbdrafting@aol.com

2924 Sierra St, Riverbank, CA 95367
Residence for Sammy Allatry

Energy Calculations

T24-B

PBPDRAFTING EXPRESSLY RESERVES ITS COMMON LAW COPYRIGHT AND OTHER PROPERTY RIGHTS IN THESE PLANS. THEY MAY NOT BE REPRODUCED, CHANGED, COPIED, ASSIGNED TO ANY OR USED FOR OTHER THAN THAT INTENDED WITHOUT FIRST OBTAINING THE WRITTEN PERMISSION AND CONSENT BY DESIGNER

CERTIFICATE OF COMPLIANCE - RESIDENTIAL PERFORMANCE COMPLIANCE METHOD **CF1R-PRF-01-E**

Project Name: Allatry-Unit-B **Calculation Date/Time:** 2024-10-19T15:54:18-07:00 **(Page 9 of 14)**

Calculation Description: Title 24 Analysis **Input File Name:** 20524-Unit-B.ribd22x

SLAB FLOORS

01	02	03	04	05	06	07	08
Name	Zone	Area (ft^2)	Perimeter (ft)	Edge Insul. R-value and Depth	Edge Insul. R-value and Depth	Carpeted Fraction	Heated
Slab-on-Grade	1st Floor Zone (ZONE)	636	84.5	none	0	80%	No

OPAQUE SURFACE CONSTRUCTIONS

01	02	03	04	05	06	07	08
Construction Name	Surface Type	Construction Type	Framing	Total Cavity R-value	Interior / Exterior Continuous R-value	U-factor	Assembly Layers
R-21 Wall	Exterior Walls	Wood Framed Wall	2x6 @ 16 in. O. C.	R-21	None / None	0.066	Inside Finish: Gypsum Board Cavity / Frame: R-21 / 2x6 Exterior Finish: Wood Siding/sheathing/decking
R-15 Wall	Exterior Walls	Wood Framed Wall	2x4 @ 16 in. O. C.	R-15	None / None	0.095	Inside Finish: Gypsum Board Cavity / Frame: R-15 / 2x4 Exterior Finish: 3 Coat Stucco
R-0 Wall	Interior Walls	Wood Framed Wall	2x4 @ 16 in. O. C.	R-0	None / None	0.277	Inside Finish: Gypsum Board Cavity / Frame: no insul. / 2x4 Other Side Finish: Gypsum Board
Attic Roof2nd Floor Zone (ZONE)	Attic Roofs	Wood Framed Ceiling	2x4 @ 24 in. O. C.	R-0	None / 0	0.644	Roofing: Light Roof (Asphalt Shingle) Roof Deck: Wood Siding/sheathing/decking Cavity / Frame: no insul. / 2x4
R-38 Roof Attic	Ceilings (below attic)	Wood Framed Ceiling	2x6 @ 16 in. O. C.	R-38	None / None	0.026	Over Ceiling Joists: R-23.7 Insul. Cavity / Frame: R-14.3 / 2x6 Inside Finish: Gypsum Board

Registration Number: 424-P010253873A-000-000-0000000-0000 Registration Date/Time: 10/19/2024 15:59 HERS Provider: CHEERS

NOTICE: This document has been generated by California Home Energy Efficiency Rating Services (CHEERS) using information uploaded by third parties not affiliated with or related to CHEERS. Therefore, CHEERS is not responsible for, and cannot guarantee, the accuracy or completeness of the information contained in this document.

CA Building Energy Efficiency Standards - 2022 Residential Compliance Report Version: 2022.0.000 Report Generated: 2024-10-19 15:55:03

Schema Version: rev 20220901

CERTIFICATE OF COMPLIANCE - RESIDENTIAL PERFORMANCE COMPLIANCE METHOD **CF1R-PRF-01-E**

Project Name: Allatry-Unit-B **Calculation Date/Time:** 2024-10-19T15:54:18-07:00 **(Page 10 of 14)**

Calculation Description: Title 24 Analysis **Input File Name:** 20524-Unit-B.ribd22x

OPAQUE SURFACE CONSTRUCTIONS

01	02	03	04	05	06	07	08
Construction Name	Surface Type	Construction Type	Framing	Total Cavity R-value	Interior / Exterior Continuous R-value	U-factor	Assembly Layers
Attic-R-0 - Attic	Interior Ceiling	Wood Framed Ceiling	2x4 @ 16 in. O. C.	R-0	None / None	0.202	Floor Surface: Carpeted Floor Deck: Wood Siding/sheathing/decking Cavity / Frame: no insul. / 2x4 Ceiling Below Finish: Gypsum Board

BUILDING ENVELOPE - HERS VERIFICATION

01	02	03	04	05
Quality Insulation Installation (QII)	High R-value Spray Foam Insulation	Building Envelope Air Leakage	CFM50	CFM50
Required	Not Required	N/A	n/a	n/a

WATER HEATING SYSTEMS

01	02	03	04	05	06	07	08	09
Name	System Type	Distribution Type	Water Heater Name	Number of Units	Solar Heating System	Compact Distribution	HERS Verification	Water Heater Name (#)
DHW Sys 1	Domestic Hot Water (DHW)	Standard	DHW Heater 1	1	n/a	None	n/a	DHW Heater 1 (1)

WATER HEATERS - NEEA HEAT PUMP

01	02	03	04	05	06	07	08
Name	# of Units	Tank Vol. (gal)	NEEA Heat Pump Brand	NEEA Heat Pump Model	Tank Location	Duct Inlet Air Source	Duct Outlet Air Source
DHW Heater 1	1	40	Rheem	Rheem HPLD40-1RH	Outside	2nd Floor Zone (ZONE)	2nd Floor Zone (ZONE)

Registration Number: 424-P010253873A-000-000-0000000-0000 Registration Date/Time: 10/19/2024 15:59 HERS Provider: CHEERS

NOTICE: This document has been generated by California Home Energy Efficiency Rating Services (CHEERS) using information uploaded by third parties not affiliated with or related to CHEERS. Therefore, CHEERS is not responsible for, and cannot guarantee, the accuracy or completeness of the information contained in this document.

CA Building Energy Efficiency Standards - 2022 Residential Compliance Report Version: 2022.0.000 Report Generated: 2024-10-19 15:55:03

Schema Version: rev 20220901

CERTIFICATE OF COMPLIANCE - RESIDENTIAL PERFORMANCE COMPLIANCE METHOD **CF1R-PRF-01-E**

Project Name: Allatry-Unit-B **Calculation Date/Time:** 2024-10-19T15:54:18-07:00 **(Page 11 of 14)**

Calculation Description: Title 24 Analysis **Input File Name:** 20524-Unit-B.ribd22x

WATER HEATING - HERS VERIFICATION

01	02	03	04	05	06	07
Name	Pipe Insulation	Parallel Piping	Compact Distribution	Compact Distribution Type	Recirculation Control	Shower Drain Water Heat Recovery
DHW Sys 1 - 1/1	Not Required	Not Required	Not Required	None	Not Required	Not Required

SPACE CONDITIONING SYSTEMS

01	02	03	04	05	06	07	08	09
Name	System Type	Heating Unit Name	Heating Equipment Count	Cooling Unit Name	Cooling Equipment Count	Fan Name	Distribution Name	Required Thermostat Type
Res HVAC (SYSTEM)-1	Heat pump heating cooling	Heat Pump System 1	1	Heat Pump System 1	1	HVAC Fan 1	Air Distribution System 1	Setback

HVAC - HEAT PUMPS

01	02	03	04	05	06	07	08	09	10	11	12	13
				Heating			Cooling					
Name	System Type	Number of Units	Heating Efficiency Type	HSPF/VIS PF2/COP	Cap 47	Cap 17	Cooling Efficiency Type	SEER/SEER2	EER/EER2/CEER	Zonally Controlled	Compressor Type	HERS Verification
Heat Pump System 1	Central split HP	1	HSPF2	8.5	32000	20000	EER2SEER2	14	11.5	Not Zonal	Single Speed	Heat Pump System 1-hers-hpump

HVAC HEAT PUMPS - HERS VERIFICATION

01	02	03	04	05	06	07	08	09
Name	Verified Airflow	Airflow Target	Verified EER/EER2	Verified SEER/SEER2	Verified Refrigerant Charge	Verified HSPF/HSPF2	Verified Heating Cap 47	Verified Heating Cap 17
Heat Pump System 1-hers-hpump	Required	350	Not Required	Not Required	Yes	Yes	Yes	Yes

Registration Number: 424-P010253873A-000-000-0000000-0000 Registration Date/Time: 10/19/2024 15:59 HERS Provider: CHEERS

NOTICE: This document has been generated by California Home Energy Efficiency Rating Services (CHEERS) using information uploaded by third parties not affiliated with or related to CHEERS. Therefore, CHEERS is not responsible for, and cannot guarantee, the accuracy or completeness of the information contained in this document.

CA Building Energy Efficiency Standards - 2022 Residential Compliance Report Version: 2022.0.000 Report Generated: 2024-10-19 15:55:03

Schema Version: rev 20220901

CERTIFICATE OF COMPLIANCE - RESIDENTIAL PERFORMANCE COMPLIANCE METHOD **CF1R-PRF-01-E**

Project Name: Allatry-Unit-B **Calculation Date/Time:** 2024-10-19T15:54:18-07:00 **(Page 12 of 14)**

Calculation Description: Title 24 Analysis **Input File Name:** 20524-Unit-B.ribd22x

HVAC - DISTRIBUTION SYSTEMS

01	02	03	04	05	06	07	08	09	10	11	12
			Duct Ins. R-value		Duct Location		Surface Area				
Name	Type	Design Type	Supply	Return	Supply	Return	Supply	Return	Bypass Duct	Duct Leakage	HERS Verification
Air Distribution System 1	Unconditioned attic	Non-Verified	R-8	R-8	Attic	Attic	n/a	n/a	No Bypass Duct	Sealed and Tested	Air Distribution System 1-hers-dist

HVAC DISTRIBUTION - HERS VERIFICATION

01	02	03	04	05	06	07	08	09
Name	Duct Leakage Verification	Duct Leakage Target (%)	Verified Duct Location	Verified Duct Design	Buried Ducts	Deeply Buried Ducts	Low-leakage Air Handler	Low Leakage Ducts Entirely in Conditioned Space
Air Distribution System 1-hers-dist	Yes	5.0	Not Required	Not Required	Not Required	Credit not taken	Not Required	No

HVAC - FAN SYSTEMS

01	02	03	04
Name	Type	Fan Power (Watts/CFM)	Name
HVAC Fan 1	HVAC Fan	0.45	HVAC Fan 1-hers-fan

HVAC FAN SYSTEMS - HERS VERIFICATION

01	02	03
Name	Verified Fan Watt Draw	Required Fan Efficacy (Watts/CFM)
HVAC Fan 1-hers-fan	Required	0.45

Registration Number: 424-P010253873A-000-000-0000000-0000 Registration Date/Time: 10/19/2024 15:59 HERS Provider: CHEERS

NOTICE: This document has been generated by California Home Energy Efficiency Rating Services (CHEERS) using information uploaded by third parties not affiliated with or related to CHEERS. Therefore, CHEERS is not responsible for, and cannot guarantee, the accuracy or completeness of the information contained in this document.

CA Building Energy Efficiency Standards - 2022 Residential Compliance Report Version: 2022.0.000 Report Generated: 2024-10-19 15:55:03

Schema Version: rev 20220901

CERTIFICATE OF COMPLIANCE - RESIDENTIAL PERFORMANCE COMPLIANCE METHOD **CF1R-PRF-01-E**

Project Name: Allatry-Unit-B **Calculation Date/Time:** 2024-10-19T15:54:18-07:00 **(Page 13 of 14)**

Calculation Description: Title 24 Analysis **Input File Name:** 20524-Unit-B.ribd22x

INDOOR AIR QUALITY (IAQ) FANS

01	02	03	04	05	06	07	08	09
Dwelling Unit	Airflow (CFM)	Fan Efficacy (W/CFM)	IAQ Fan Type	Includes Heat/Energy Recovery?	IAQ Recovery Effectiveness - SRE/ASRE	Includes Fault Indicator Display?	HERS Verification	Status
SFam IAQVentRpt	66	0.35	Exhaust	No	n/a / n/a	No	Yes	

Registration Number: 424-P010253873A-000-000-0000000-0000 Registration Date/Time: 10/19/2024 15:59 HERS Provider: CHEERS

NOTICE: This document has been generated by California Home Energy Efficiency Rating Services (CHEERS) using information uploaded by third parties not affiliated with or related to CHEERS. Therefore, CHEERS is not responsible for, and cannot guarantee, the accuracy or completeness of the information contained in this document.

CA Building Energy Efficiency Standards - 2022 Residential Compliance Report Version: 2022.0.000 Report Generated: 2024-10-19 15:55:03

Schema Version: rev 20220901

CERTIFICATE OF COMPLIANCE - RESIDENTIAL PERFORMANCE COMPLIANCE METHOD **CF1R-PRF-01-E**

Project Name: Allatry-Unit-B **Calculation Date/Time:** 2024-10-19T15:54:18-07:00 **(Page 14 of 14)**

Calculation Description: Title 24 Analysis **Input File Name:** 20524-Unit-B.ribd22x

DOCUMENTATION AUTHOR'S DECLARATION STATEMENT

1. I certify that this Certificate of Compliance documentation is accurate and complete.

Documentation Author Name: RONALD ALLEN	Documentation Author Signature: RONALD ALLEN
Company: vector consulting	Signature Date: 10/19/2024
Address: 4309 Main St	CEA/ HERS Certification Identification (If applicable): n/a
City/State/Zip: Denair, CA 95316	Phone: 2095354650

RESPONSIBLE PERSON'S DECLARATION STATEMENT

I certify the following under penalty of perjury, under the laws of the State of California:

1. I am eligible under Division 3 of the Business and Professions Code to accept responsibility for the building design identified on this Certificate of Compliance.
2. I certify that the energy features and performance specifications identified on this Certificate of Compliance conform to the requirements of Title 24, Part 1 and Part 6 of the California Code of Regulations.
3. The building design features or system design features identified on this Certificate of Compliance are consistent with the information provided on other applicable compliance documents, worksheets, calculations, plans and specifications submitted to the enforcement agency for approval with this building permit application.

Responsible Designer Name: RONALD ALLEN	Responsible Designer Signature: RONALD ALLEN
Company: vector consulting	Date Signed: 10/19/2024
Address: 4309 Main St	License:
City/State/Zip: Denair, CA 95316	Phone: 2095354650

CABEC CERTIFIED ENERGY ANALYST

Digitally signed by California Home Energy Efficiency Rating Services (CHEERS). This digital signature is provided in order to secure the content of this registered document, and in no way replaces Registration Provider responsibility for the accuracy of the information.

Registration Number: 424-P010253873A-000-000-0000000-0000 Registration Date/Time: 10/19/2024 15:59 HERS Provider: CHEERS

NOTICE: This document has been generated by California Home Energy Efficiency Rating Services (CHEERS) using information uploaded by third parties not affiliated with or related to CHEERS. Therefore, CHEERS is not responsible for, and cannot guarantee, the accuracy or completeness of the information contained in this document.

CA Building Energy Efficiency Standards - 2022 Residential Compliance Report Version: 2022.0.000 Report Generated: 2024-10-19 15:55:03

Schema Version: rev 20220901

REV	DATE	DESCRIPTION	BY

DATE: 09/25/24

SCALE: As Noted

PREPARED BY:

PBPdrafting&design
pbpdrafting@aol.com

2924 Sierra St, Riverbank, CA 95367
Residence for Sammy Allatry

Energy Calculations

T24-B

PBDdrafting expressly reserves its common law copyright and other property rights in these plans. They may not be reproduced, changed, copied, assigned to any or used for other than that intended without first obtaining the written permission and consent by designer

CERTIFICATE OF COMPLIANCE - RESIDENTIAL PERFORMANCE COMPLIANCE METHOD CF1R-PRF-01-E

Project Name: Allatry-Unit-C **Calculation Date/Time:** 2024-10-19T15:48:53-07:00 **(Page 1 of 14)**

Calculation Description: Title 24 Analysis **Input File Name:** 20524-Unit-C.ribd22x

GENERAL INFORMATION

01	Project Name	Allatry-Unit-C			
02	Run Title	Title 24 Analysis			
03	Project Location	2924 Sierra Street			
04	City	Riverbank	05	Standards Version	2022
06	Zip code	95367	07	Software Version	EnergyPro 9.3
08	Climate Zone	12	09	Front Orientation (deg/ Cardinal)	270
10	Building Type	Single family	11	Number of Dwelling Units	1
12	Project Scope	Newly Constructed	13	Number of Bedrooms	3
14	Addition Cond. Floor Area (ft^2)	0	15	Number of Stories	2
16	Existing Cond. Floor Area (ft^2)	n/a	17	Fenestration Average U-factor	0.3
18	Total Cond. Floor Area (ft^2)	1280	19	Glazing Percentage (%)	14.69%
20	ADU Bedroom Count	n/a	21	ADU Conditioned Floor Area	n/a
22	Fuel Type	All electric	23	No Dwelling Unit:	No

COMPLIANCE RESULTS

01	Building Complies with Computer Performance
02	This building incorporates features that require field testing and/or verification by a certified HERS rater under the supervision of a CEC-approved HERS provider.
03	This building incorporates one or more Special Features shown below

CERTIFICATE OF COMPLIANCE - RESIDENTIAL PERFORMANCE COMPLIANCE METHOD CF1R-PRF-01-E

Project Name: Allatry-Unit-C **Calculation Date/Time:** 2024-10-19T15:48:53-07:00 **(Page 2 of 14)**

Calculation Description: Title 24 Analysis **Input File Name:** 20524-Unit-C.ribd22x

ENERGY DESIGN RATINGS

	Energy Design Ratings			Compliance Margins		
	Source Energy (EDR1)	Efficiency[1] EDR (EDR2efficiency)	Total[2] EDR (EDR2total)	Source Energy (EDR1)	Efficiency[3] EDR (EDR2efficiency)	Total[3] EDR (EDR2total)
Standard Design	34.3	34.3	31.7			
Proposed Design	29.4	32.9	30.7	4.9	1.4	1

RESULT[3]: PASS

[1]Efficiency EDR Includes improvements like a better building envelope and more efficient equipment
[2]Total EDR includes efficiency and demand response measures such as photovoltaic (PV) system and batteries
[3]Building complies when source energy, efficiency and total compliance margins are greater than or equal to zero and unmet load hour limits are not exceeded

- Standard Design PV Capacity: 2.53 kWdc
- PV System resisted to 2.53 kWdc (a factor of 2.532) to achieve "Standard Design PV" PV scaling

CERTIFICATE OF COMPLIANCE - RESIDENTIAL PERFORMANCE COMPLIANCE METHOD CF1R-PRF-01-E

Project Name: Allatry-Unit-C **Calculation Date/Time:** 2024-10-19T15:48:53-07:00 **(Page 3 of 14)**

Calculation Description: Title 24 Analysis **Input File Name:** 20524-Unit-C.ribd22x

ENERGY USE SUMMARY

Energy Use	Standard Design Source Energy (EDR1) (kBtu/ft^2 -yr)	Standard Design TDV Energy (EDR2) (kTDV/ft^2 -yr)	Proposed Design Source Energy (EDR1) (kBtu/ft^2 -yr)	Proposed Design TDV Energy (EDR2) (kTDV/ft^2 -yr)	Compliance Margin (EDR1)	Compliance Margin (EDR2)
Space Heating	4.74	32.1	3.19	24.27	1.55	7.83
Space Cooling	0.83	23.48	1.13	36.24	-0.3	-12.76
IAQ Ventilation	0.4	4.27	0.4	4.27	0	0
Water Heating	2.36	24.49	1.47	16.06	0.89	8.43
Self Utilization/Flexibility Credit			0	0	0	0
Efficiency Compliance Total	8.33	84.34	6.19	80.84	2.14	3.5
Photovoltaics	-1.61	-55.78	-1.61	-55.85		
Battery			0	0		
Flexibility			0			
Indoor Lighting	0.79	7.89	0.79	7.89		
Appl. & Cooking	3.11	38.6	3.1	38.48		
Plug Loads	4.26	44.41	4.26	44.41		
Outdoor Lighting	0.19	1.79	0.19	1.79		
TOTAL COMPLIANCE	15.07	121.25	12.92	117.56		

CERTIFICATE OF COMPLIANCE - RESIDENTIAL PERFORMANCE COMPLIANCE METHOD CF1R-PRF-01-E

Project Name: Allatry-Unit-C **Calculation Date/Time:** 2024-10-19T15:48:53-07:00 **(Page 4 of 14)**

Calculation Description: Title 24 Analysis **Input File Name:** 20524-Unit-C.ribd22x

ENERGY USE INTENSITY

	Standard Design (kBtu/ft^2 - yr)	Proposed Design (kBtu/ft^2 - yr)	Compliance Margin (kBtu/ft^2 - yr)	Margin Percentage
Gross EUI[1]	20.95	18.52	2.43	11.6
Net EUI[2]	10.4	7.97	2.43	23.37

Notes
1. Gross EUI is Energy Use Total (not including PV) / Total Building Area.
2. Net EUI is Energy Use Total (including PV) / Total Building Area.

REQUIRED PV SYSTEMS

01	02	03	04	05	06	07	08	09	10	11	12
DC System Size (kWdc)	Exception	Module Type	Array Type	Power Electronics	CFI	Azimuth (deg)	Tilt Input	Array Angle (deg)	Tilt: (x in 12)	Inverter Eff. (%)	Annual Solar Access (%)
2.53	NA	Standard (14-17%)	Fixed	none	true	150-270	n/a	n/a	<=7:12	96	98

REQUIRED SPECIAL FEATURES

The following are features that must be installed as condition for meeting the modeled energy performance for this computer analysis.

- Cool roof
- Window overhangs and/or fins
- Northwest Energy Efficiency Alliance (NEEA) rated heat pump water heater, specific brand/model, or equivalent, must be installed

CERTIFICATE OF COMPLIANCE - RESIDENTIAL PERFORMANCE COMPLIANCE METHOD CF1R-PRF-01-E

Project Name: Allatry-Unit-C **Calculation Date/Time:** 2024-10-19T15:48:53-07:00 **(Page 5 of 14)**

Calculation Description: Title 24 Analysis **Input File Name:** 20524-Unit-C.ribd22x

HERS FEATURE SUMMARY

The following is a summary of the features that must be field-verified by a certified HERS Rater as a condition for meeting the modeled energy performance for this computer analysis. Additional detail is provided in the building tables below. Registered CF2Rs and CF3Rs are required to be completed in the HERS Registry

- Quality insulation installation (QII)
- Indoor air quality ventilation
- Kitchen range hood
- Minimum Airflow
- Verified Refrigerant Charge
- Fan Efficacy Watts/CFM
- Verified HSPF2
- Verified heat pump rated heating capacity
- Duct leakage testing

BUILDING - FEATURES INFORMATION

01	02	03	04	05	06	07
Project Name	Conditioned Floor Area (ft^2)	Number of Dwelling Units	Number of Bedrooms	Number of Zones	Number of Ventilation Cooling Systems	Number of Water Heating Systems
Allatry-Unit-C	1280	1	3	2	0	1

ZONE INFORMATION

01	02	03	04	05	06	07
Zone Name	Zone Type	HVAC System Name	Zone Floor Area (ft^2)	Avg. Ceiling Height	Water Heating System 1	Status
1st Floor Zone (ZONE)	Conditioned	Res HVAC (SYSTEM)-1	636	9	DHW Sys 1	New
2nd Floor Zone (ZONE)	Conditioned	Res HVAC (SYSTEM)-1	644	9	DHW Sys 1	New

OPAQUE SURFACES

01	02	03	04	05	06	07	08
Name	Zone	Construction	Azimuth	Orientation	Gross Area (ft^2)	Window and Door Area (ft2)	Tilt (deg)
Front Wall/1	1st Floor Zone (ZONE)	R-21 Wall	270	Front	59	0	90
Right Wall/1	1st Floor Zone (ZONE)	R-15 Wall	180	Right	180	0	90
Back Wall/1	1st Floor Zone (ZONE)	R-21 Wall	90	Back	290	69.984	90

CERTIFICATE OF COMPLIANCE - RESIDENTIAL PERFORMANCE COMPLIANCE METHOD CF1R-PRF-01-E

Project Name: Allatry-Unit-C **Calculation Date/Time:** 2024-10-19T15:48:53-07:00 **(Page 6 of 14)**

Calculation Description: Title 24 Analysis **Input File Name:** 20524-Unit-C.ribd22x

OPAQUE SURFACES

01	02	03	04	05	06	07	08
Name	Zone	Construction	Azimuth	Orientation	Gross Area (ft^2)	Window and Door Area (ft2)	Tilt (deg)
Front Wall/2	2nd Floor Zone (ZONE)	R-21 Wall	270	Front	290	42	90
Right Wall/2	2nd Floor Zone (ZONE)	R-15 Wall	180	Right	180	23	90
BackWall/4	2nd Floor Zone (ZONE)	R-21 Wall	90	Back	290	18	90
Wall to Unit-B	1st Floor Zone (ZONE)>>1st Floor Zone (ZONE)	R-0 Wall	n/a	n/a	180	0	n/a
Wall to Unit-B 2	2nd Floor Zone (ZONE)>>2nd Floor Zone (ZONE)	R-0 Wall	n/a	n/a	180	0	n/a
Roof-2	2nd Floor Zone (ZONE)	R-38 Roof Attic	n/a	n/a	322	n/a	n/a
Roof-1	2nd Floor Zone (ZONE)	R-38 Roof Attic	n/a	n/a	322	n/a	n/a
Interior Surface-Attic ov	1st Floor Zone (ZONE)	Attic-R-0 - Attic	n/a	n/a	636	n/a	n/a

ATTIC

01	02	03	04	05	06	07	08
Name	Construction	Type	Roof Rise (x in 12)	Roof Reflectance	Roof Emittance	Radiant Barrier	Cool Roof
Attic 2nd Floor Zone (ZONE)	Attic Roof2nd Floor Zone (ZONE)	Ventilated	5	0.3	0.75	Yes	Yes

FENESTRATION / GLAZING

01	02	03	04	05	06	07	08	09	10	11	12	13	14
Name	Type	Surface	Orientation	Azimuth	Width (ft)	Height (ft)	Mult.	Area (ft^2)	U-factor	U-factor Source	SHGC	SHGC Source	Exterior Shading
3.0 x 5.0 Windows	Window	Front Wall/1	Front	270	3	5	1	15	0.3	NFRC	0.3	NFRC	Bug Screen
3.0 x 4.0 Windows	Window	Front Wall/1	Front	270	3	4	1	12	0.3	NFRC	0.3	NFRC	Bug Screen

CERTIFICATE OF COMPLIANCE - RESIDENTIAL PERFORMANCE COMPLIANCE METHOD CF1R-PRF-01-E

Project Name: Allatry-Unit-C **Calculation Date/Time:** 2024-10-19T15:48:53-07:00 **(Page 7 of 14)**

Calculation Description: Title 24 Analysis **Input File Name:** 20524-Unit-C.ribd22x

FENESTRATION / GLAZING

01	02	03	04	05	06	07	08	09	10	11	12	13	14
Name	Type	Surface	Orientation	Azimuth	Width (ft)	Height (ft)	Mult.	Area (ft^2)	U-factor	U-factor Source	SHGC	SHGC Source	Exterior Shading
2.0 x 4.0 Windows	Window	Front Wall/1	Front	270	2	4	1	8	0.3	NFRC	0.3	NFRC	Bug Screen
3.0 x 5.0 Window-B-2	Window	Back Wall/1	Back	90	3	5	2	30	0.3	NFRC	0.3	NFRC	Bug Screen
6.0 x 6.667 Slider	Window	Back Wall/1	Back	90	6	6.8	0	39.98	0.3	NFRC	0.3	NFRC	Bug Screen
3.0 x 5.0 Window-D-2	Window	Front Wall/2	Front	270	3	5	2	30	0.3	NFRC	0.3	NFRC	Bug Screen
3.0 x 3.0 Window -M	Window	Front Wall/2	Front	270	3	3	1	9	0.3	NFRC	0.3	NFRC	Bug Screen
3.0 x 1.0 Window -P	Window	Front Wall/2	Front	270	3	1	1	3	0.3	NFRC	0.3	NFRC	Bug Screen
3.0 x 5.0 New Window	Window	Right Wall/2	Right	180	3	5	1	15	0.3	NFRC	0.3	NFRC	Bug Screen
2.0 x 4.0 New Window	Window	Right Wall/2	Right	180	2	4	1	8	0.3	NFRC	0.3	NFRC	Bug Screen
3.0 x 1.0 Window	Window	BackWall/4	Back	90	3	1	1	3	0.3	NFRC	0.3	NFRC	Bug Screen
3.0 x 5.0 New Window-R	Window	BackWall/4	Back	90	3	5	1	15	0.3	NFRC	0.3	NFRC	Bug Screen

CERTIFICATE OF COMPLIANCE - RESIDENTIAL PERFORMANCE COMPLIANCE METHOD CF1R-PRF-01-E

Project Name: Allatry-Unit-C **Calculation Date/Time:** 2024-10-19T15:48:53-07:00 **(Page 8 of 14)**

Calculation Description: Title 24 Analysis **Input File Name:** 20524-Unit-C.ribd22x

OPAQUE DOORS

01	02	03	04
Name	Side of Building	Area (ft^2)	U-factor
Door-Entry	Front Wall/1	24	0.5

OVERHANGS AND FINS

01	02	03	04	05	06	07	08	09	10	11	12	13	14
Window	Overhang					Left Fin				Right Fin			
	Depth	Dist Up	Left Extent	Right Extent	Flap Ht.	Depth	Top Up	Dist L	Bot Up	Depth	Top Up	Dist R	Bot Up
3.0 x 5.0 Windows	1.6	1	0	0	0	0	0	0	0	0	0	0	0
3.0 x 4.0 Windows	1.6	1	0	0	0	0	0	0	0	0	0	0	0
2.0 x 4.0 Windows	1.6	1	0	0	0	0	0	0	0	0	0	0	0
3.0 x 5.0 Window-B-2	1.6	1	0	0	0	0	0	0	0	0	0	0	0
6.0 x 6.667 Slider	1.6	1	0	0	0	0	0	0	0	0	0	0	0
3.0 x 5.0 Window-D-2	1.6	1	0	0	0	0	0	0	0	0	0	0	0
3.0 x 3.0 Window -M	1.6	1	0	0	0	0	0	0	0	0	0	0	0
3.0 x 1.0 Window -P	1.6	1	0	0	0	0	0	0	0	0	0	0	0
3.0 x 5.0 New Window	1.6	1	0	0	0	0	0	0	0	0	0	0	0
2.0 x 4.0 New Window	1.6	1	0	0	0	0	0	0	0	0	0	0	0
3.0 x 1.0 Window	1.6	1	0	0	0	0	0	0	0	0	0	0	0
3.0 x 5.0 New Window-R	1.6	1	0	0	0	0	0	0	0	0	0	0	0

REV	DATE	DESCRIPTION	BY

DATE: 09/25/24

SCALE: As Noted

PREPARED BY:
PBDdrafting&design
pbdrafting@aol.com

2924 Sierra St, Riverbank, CA 95367
Residence for Sammy Allatry
Energy Calculations

T24-C

PBPDrafting expressly reserves its common law copyright and other property rights in these plans. They may not be reproduced, changed, copied, assigned to any or used for other than that intended without first obtaining the written permission and consent by designer

CERTIFICATE OF COMPLIANCE - RESIDENTIAL PERFORMANCE COMPLIANCE METHOD **CF1R-PRF-01-E**
Project Name: Allatry-Unit-C **Calculation Date/Time:** 2024-10-19T15:48:53-07:00 **(Page 9 of 14)**
Calculation Description: Title 24 Analysis **Input File Name:** 20524-Unit-C.ribd22x

SLAB FLOORS

01	02	03	04	05	06	07	08
Name	Zone	Area (ft^2)	Perimeter (ft)	Edge Insul. R-value and Depth	Edge Insul. R-value and Depth	Carpeted Fraction	Heated
Slab-on-Grade	1st Floor Zone (ZONE)	636	84.5	none	0	80%	No

OPAQUE SURFACE CONSTRUCTIONS

01	02	03	04	05	06	07	08
Construction Name	Surface Type	Construction Type	Framing	Total Cavity R-value	Interior / Exterior Continuous R-value	U-factor	Assembly Layers
R-21 Wall	Exterior Walls	Wood Framed Wall	2x6 @ 16 in. O. C.	R-21	None / None	0.066	Inside Finish: Gypsum Board Cavity / Frame: R-21 / 2x6 Exterior Finish: Wood Siding/sheathing/decking
R-15 Wall	Exterior Walls	Wood Framed Wall	2x4 @ 16 in. O. C.	R-15	None / None	0.095	Inside Finish: Gypsum Board Cavity / Frame: R-15 / 2x4 Exterior Finish: 3 Coat Stucco
R-0 Wall	Interior Walls	Wood Framed Wall	2x4 @ 16 in. O. C.	R-0	None / None	0.277	Inside Finish: Gypsum Board Cavity / Frame: no Insul. / 2x4 Other Side Finish: Gypsum Board
Attic RoofZnd Floor Zone (ZONE)	Attic Roofs	Wood Framed Ceiling	2x4 @ 24 in. O. C.	R-0	None / 0	0.644	Roofing: Light Roof (Asphalt Shingle) Roof Deck: Wood Siding/sheathing/decking Cavity / Frame: no Insul. / 2x4
R-38 Roof Attic	Ceilings (below attic)	Wood Framed Ceiling	2x6 @ 16 in. O. C.	R-38	None / None	0.026	Over Ceiling Joists: R-23.7 Insul. Cavity / Frame: R-14.3 / 2x6 Inside Finish: Gypsum Board

Registration Number: 424-P010253874A-000-000-0000000-0000 Registration Date/Time: 10/19/2024 15:59 HERS Provider: CHEERS
Notice: This document, the data or information collected by California Home Energy Rating Services (CHEERS) using information uploaded by third parties not affiliated with or related to CHEERS. Therefore, CHEERS is not responsible for, and cannot guarantee, the accuracy or completeness of the information contained in this document.
CA Building Energy Efficiency Standards - 2022 Residential Compliance Report Version: 2022.0.000 Schema Version: rev 20220901 Report Generated: 2024-10-19 15:49:40

CERTIFICATE OF COMPLIANCE - RESIDENTIAL PERFORMANCE COMPLIANCE METHOD **CF1R-PRF-01-E**
Project Name: Allatry-Unit-C **Calculation Date/Time:** 2024-10-19T15:48:53-07:00 **(Page 10 of 14)**
Calculation Description: Title 24 Analysis **Input File Name:** 20524-Unit-C.ribd22x

OPAQUE SURFACE CONSTRUCTIONS

01	02	03	04	05	06	07	08
Construction Name	Surface Type	Construction Type	Framing	Total Cavity R-value	Interior / Exterior Continuous R-value	U-factor	Assembly Layers
Attic-R-0 - Attic	Interior Ceiling	Wood Framed Ceiling	2x4 @ 16 in. O. C.	R-0	None / None	0.202	Floor Surface: Carpeted Floor Deck: Wood Siding/sheathing/decking Cavity / Frame: no Insul. / 2x4 Ceiling Below Finish: Gypsum Board

BUILDING ENVELOPE - HERS VERIFICATION

01	02	03	04	05
Quality Insulation Installation (QII)	High R-value Spray Foam Insulation	Building Envelope Air Leakage	CFM50	CFM50
Required	Not Required	N/A	n/a	n/a

WATER HEATING SYSTEMS

01	02	03	04	05	06	07	08	09
Name	System Type	Distribution Type	Water Heater Name	Number of Units	Solar Heating System	Compact Distribution	HERS Verification	Water Heater Name (#)
DHW Sys 1	Domestic Hot Water (DHW)	Standard	DHW Heater 1	1	n/a	None	n/a	DHW Heater 1 (1)

WATER HEATERS - NEEA HEAT PUMP

01	02	03	04	05	06	07	08
Name	# of Units	Tank Vol. (gal)	NEEA Heat Pump Brand	NEEA Heat Pump Model	Tank Location	Duct Inlet Air Source	Duct Outlet Air Source
DHW Heater 1	1	40	Rheem	Rheem HPLD40-18H	Outside	2nd Floor Zone (ZONE)	2nd Floor Zone (ZONE)

Registration Number: 424-P010253874A-000-000-0000000-0000 Registration Date/Time: 10/19/2024 15:59 HERS Provider: CHEERS
Notice: This document, the data or information collected by California Home Energy Rating Services (CHEERS) using information uploaded by third parties not affiliated with or related to CHEERS. Therefore, CHEERS is not responsible for, and cannot guarantee, the accuracy or completeness of the information contained in this document.
CA Building Energy Efficiency Standards - 2022 Residential Compliance Report Version: 2022.0.000 Schema Version: rev 20220901 Report Generated: 2024-10-19 15:49:40

CERTIFICATE OF COMPLIANCE - RESIDENTIAL PERFORMANCE COMPLIANCE METHOD **CF1R-PRF-01-E**
Project Name: Allatry-Unit-C **Calculation Date/Time:** 2024-10-19T15:48:53-07:00 **(Page 11 of 14)**
Calculation Description: Title 24 Analysis **Input File Name:** 20524-Unit-C.ribd22x

WATER HEATING - HERS VERIFICATION

01	02	03	04	05	06	07
Name	Pipe Insulation	Parallel Piping	Compact Distribution	Compact Distribution Type	Recirculation Control	Shower Drain Water Heat Recovery
DHW Sys 1 - 1/1	Not Required	Not Required	Not Required	None	Not Required	Not Required

SPACE CONDITIONING SYSTEMS

01	02	03	04	05	06	07	08	09
Name	System Type	Heating Unit Name	Heating Equipment Count	Cooling Unit Name	Cooling Equipment Count	Fan Name	Distribution Name	Required Thermostat Type
Res HVAC (SYSTEM)-1	Heat pump heating cooling	Heat Pump System 1	1	Heat Pump System 1	1	HVAC Fan 1	Air Distribution System 1	Setback

HVAC - HEAT PUMPS

01	02	03	04	05	06	07	08	09	10	11	12	13
Name	System Type	Number of Units	Heating				Cooling			Zonally Controlled	Compressor Type	HERS Verification
			Heating Efficiency Type	HSPF/HSPF2/COP	Cap 47	Cap 17	Cooling Efficiency Type	SEER/SEER2	EER/EER2/CEER			
Heat Pump System 1	Central split HP	1	HSPF2	8.5	32000	20000	EER2SEER2	14	11.5	Not Zonal	Single Speed	Heat Pump System 1-hers-htpump

HVAC HEAT PUMPS - HERS VERIFICATION

01	02	03	04	05	06	07	08	09
Name	Verified Airflow	Airflow Target	Verified EER/EER2	Verified SEER/SEER2	Verified Refrigerant Charge	Verified HSPF/HSPF2	Verified Heating Cap 47	Verified Heating Cap 17
Heat Pump System 1-hers-htpump	Required	350	Not Required	Not Required	Yes	Yes	Yes	Yes

Registration Number: 424-P010253874A-000-000-0000000-0000 Registration Date/Time: 10/19/2024 15:59 HERS Provider: CHEERS
Notice: This document, the data or information collected by California Home Energy Rating Services (CHEERS) using information uploaded by third parties not affiliated with or related to CHEERS. Therefore, CHEERS is not responsible for, and cannot guarantee, the accuracy or completeness of the information contained in this document.
CA Building Energy Efficiency Standards - 2022 Residential Compliance Report Version: 2022.0.000 Schema Version: rev 20220901 Report Generated: 2024-10-19 15:49:40

CERTIFICATE OF COMPLIANCE - RESIDENTIAL PERFORMANCE COMPLIANCE METHOD **CF1R-PRF-01-E**
Project Name: Allatry-Unit-C **Calculation Date/Time:** 2024-10-19T15:48:53-07:00 **(Page 12 of 14)**
Calculation Description: Title 24 Analysis **Input File Name:** 20524-Unit-C.ribd22x

HVAC - DISTRIBUTION SYSTEMS

01	02	03	04	05	06	07	08	09	10	11	12
Name	Type	Design Type	Duct Ins. R-value		Duct Location		Surface Area		Bypass Duct	Duct Leakage	HERS Verification
			Supply	Return	Supply	Return	Supply	Return			
Air Distribution System 1	Unconditioned attic	Non-Verified	R-8	R-8	Attic	Attic	n/a	n/a	No Bypass Duct	Sealed and Tested	Air Distribution System 1-hers-dist

HVAC DISTRIBUTION - HERS VERIFICATION

01	02	03	04	05	06	07	08	09
Name	Duct Leakage Verification	Duct Leakage Target (%)	Verified Duct Location	Verified Duct Design	Buried Ducts	Deeply Buried Ducts	Low-leakage Air Handler	Low Leakage Ducts Entirely in Conditioned Space
Air Distribution System 1-hers-dist	Yes	5.0	Not Required	Not Required	Not Required	Credit not taken	Not Required	No

HVAC - FAN SYSTEMS

01	02	03	04
Name	Type	Fan Power (Watts/CFM)	Name
HVAC Fan 1	HVAC Fan	0.45	HVAC Fan 1-hers-fan

HVAC FAN SYSTEMS - HERS VERIFICATION

01	02	03
Name	Verified Fan Watt Draw	Required Fan Efficacy (Watts/CFM)
HVAC Fan 1-hers-fan	Required	0.45

Registration Number: 424-P010253874A-000-000-0000000-0000 Registration Date/Time: 10/19/2024 15:59 HERS Provider: CHEERS
Notice: This document, the data or information collected by California Home Energy Rating Services (CHEERS) using information uploaded by third parties not affiliated with or related to CHEERS. Therefore, CHEERS is not responsible for, and cannot guarantee, the accuracy or completeness of the information contained in this document.
CA Building Energy Efficiency Standards - 2022 Residential Compliance Report Version: 2022.0.000 Schema Version: rev 20220901 Report Generated: 2024-10-19 15:49:40

CERTIFICATE OF COMPLIANCE - RESIDENTIAL PERFORMANCE COMPLIANCE METHOD **CF1R-PRF-01-E**
Project Name: Allatry-Unit-C **Calculation Date/Time:** 2024-10-19T15:48:53-07:00 **(Page 13 of 14)**
Calculation Description: Title 24 Analysis **Input File Name:** 20524-Unit-C.ribd22x

INDOOR AIR QUALITY (IAQ) FANS

01	02	03	04	05	06	07	08	09
Dwelling Unit	Airflow (CFM)	Fan Efficacy (W/CFM)	IAQ Fan Type	Includes Heat/Energy Recovery?	IAQ Recovery Effectiveness: SRE/ASRE	Includes Fault Indicator Display?	HERS Verification	Status
SFam IAQVentRpt	66	0.35	Exhaust	No	n/a / n/a	No	Yes	

Registration Number: 424-P010253874A-000-000-0000000-0000 Registration Date/Time: 10/19/2024 15:59 HERS Provider: CHEERS
Notice: This document, the data or information collected by California Home Energy Rating Services (CHEERS) using information uploaded by third parties not affiliated with or related to CHEERS. Therefore, CHEERS is not responsible for, and cannot guarantee, the accuracy or completeness of the information contained in this document.
CA Building Energy Efficiency Standards - 2022 Residential Compliance Report Version: 2022.0.000 Schema Version: rev 20220901 Report Generated: 2024-10-19 15:49:40

CERTIFICATE OF COMPLIANCE - RESIDENTIAL PERFORMANCE COMPLIANCE METHOD **CF1R-PRF-01-E**
Project Name: Allatry-Unit-C **Calculation Date/Time:** 2024-10-19T15:48:53-07:00 **(Page 14 of 14)**
Calculation Description: Title 24 Analysis **Input File Name:** 20524-Unit-C.ribd22x

DOCUMENTATION AUTHOR'S DECLARATION STATEMENT

I. I certify that this Certificate of Compliance documentation is accurate and complete.

Documentation Author Name: RONALD ALLEN	Documentation Author Signature: RONALD ALLEN
Company: vector consulting	Signature Date: 10/19/2024
Address: 4309 Main St	CEA / HERS Certification Identification (If applicable): n/a
City/State/Zip: Denair, CA 95316	Phone: 2095354650

RESPONSIBLE PERSON'S DECLARATION STATEMENT

I certify the following under penalty of perjury, under the laws of the State of California:
1. I am eligible under Division 3 of the Business and Professions Code to accept responsibility for the building design identified on this Certificate of Compliance.
2. I certify that the energy features and performance specifications identified on this Certificate of Compliance conform to the requirements of Title 24, Part 1 and Part 6 of the California Code of Regulations.
3. The building design features or system design features identified on this Certificate of Compliance are consistent with the information provided on other applicable compliance documents, worksheets, calculations, plans and specifications submitted to the enforcement agency for approval with this building permit application.

Responsible Designer Name: RONALD ALLEN	Responsible Designer Signature: RONALD ALLEN
Company: vector consulting	Date Signed: 10/19/2024
Address: 4309 Main St	License:
City/State/Zip: Denair, CA 95316	Phone: 2095354650

Digitally signed by California Home Energy Efficiency Rating Services (CHEERS). This digital signature is provided in order to secure the content of this registered document, and in no way implies Registration Provider responsibility for the accuracy of the information.

Registration Number: 424-P010253874A-000-000-0000000-0000 Registration Date/Time: 10/19/2024 15:59 HERS Provider: CHEERS
Notice: This document, the data or information collected by California Home Energy Rating Services (CHEERS) using information uploaded by third parties not affiliated with or related to CHEERS. Therefore, CHEERS is not responsible for, and cannot guarantee, the accuracy or completeness of the information contained in this document.
CA Building Energy Efficiency Standards - 2022 Residential Compliance Report Version: 2022.0.000 Schema Version: rev 20220901 Report Generated: 2024-10-19 15:49:40

REV	DATE	DESCRIPTION	BY

DATE: 09/25/24
SCALE: As Noted

PREPARED BY:
PBPdrafting&design
pbpdrafting@aol.com

2924 Sierra St, Riverbank, CA 95367
Residence for Sammy Allatry
Energy Calculations

T24-C

EXHIBIT "B"

CONDITIONS OF APPROVAL

ASPR 10-2024 **2924 SIERRA STREET**

This Project is subject to the following conditions unless specifically exempted, as determined by the Community Development Director or his/her designee.

A. GENERAL CONDITIONS

1. This approval is dependent upon and limited to the proposals and plans contained, supporting documents submitted, presentations made to staff, Planning Commission and/or City Council as affirmed to by the applicant. Any variation from these plans, proposals, supporting documents or presentations is subject to review and approval prior to implementation.

2. The applicant shall secure and comply with all applicable federal, state and local licenses, permits, authorizations, conditions, agreements, and orders prior to or during construction and operation, as appropriate.

3. The applicant shall comply with all regulations and code requirements of the Community Development Director, City Engineer, Building Official, Modesto Regional Fire Authority, Stanislaus Consolidated Fire Protection District, the Police Chief and any other agencies requiring review of the project. If required, these agencies shall be supplied copies of the final maps, site plans, public improvement plans, grading plans and building plans.

4. All conditions of approval for this project shall be written by the project developer on all building permit plan check sets submitted for review and approval. These conditions of approval shall be on, at all times, all grading and construction plans kept on the project site. It is the responsibility of the building developer to ensure that the project contractor is aware of, and abides by, all conditions of approval. Prior approval from the Planning Manager must be received before any changes are constituted in site design, grading, building design, building colors or materials, etc.

5. Site development plans shall be in substantial conformance to the approved site plan and must be submitted, in English units, to the City Engineering Department for review and approval. Maps shall be prepared, wet signed and sealed by a civil engineer, land surveyor, or architect registered in the State of California and licensed to prepare site development plans.

6. The applicant shall take all necessary measures to ensure that his activities or those of his agents do not result in measurable erosion of soils on the site, either wind or water, during the construction and operation of the project covered by this approval.

7. Should the project be found, at any time, not to be in compliance with any of the Conditions of Approval, or should the applicant construct or operate this development in any way other than specified in the Application or Supporting Documents or presentations to staff, Planning Commission or City Council, as modified by the Conditions of this Approval, then the terms of this Approval shall be considered to be violated.

8. If construction or operation of the activity is not begun within one year, this entitlement shall lapse and the applicant shall reapply to the City of Riverbank for a new project entitlement. The applicant may not begin construction or operation of the activity until a new entitlement is granted. Reapplications for entitlement shall state the reasons why the applicant will be able to begin the activity within a year from the granting of a new entitlement, if so granted. Reapplications for entitlement may include information submitted in the initial application by reference. The zoning will not expire; however, any associated applications (except lot line adjustments, boundary adjustments, vacation and abandonment applications) will expire, unless otherwise stated in the conditions of approval. The application(s) will expire in one year at 5:00 p.m. on the expiration date (holidays and weekends will not extend the expiration day). Any extension of time must be applied for prior to 5:00 p.m. on the expiration date.

9. Work done by a contractor pursuant to this approval shall not begin before the contractor has been shown by the applicant a copy of this permit.

10. The hours of construction, including equipment warm-up, shall be limited to 7:00 a.m. -6:30 p.m. on weekdays and 8:00 a.m. - 5:00 p.m. on weekends and legal holidays.

11. Development of the property must conform to the plans as submitted with revisions as specified by the City of Riverbank City Council and / or Planning Commission.

12. All new construction requires building permits in accordance with all applicable building and fire codes and submission of a plot and grading plan prepared by a registered professional civil engineer showing property lines, building locations, topography and such other data as required by the Community Development Department.

13. All geologic hazards must be plotted on a plot plan, and habitable structures shall comply with the restrictions specified in all applicable building and fire codes.

14. Drainage and / or traffic studies must be submitted and approved and all improvements must comply with the approved studies. Further, street and storm water management dedication and / or improvements may be required.

15. If the property is located in a flood zone, a drainage study must be submitted to and approved by the Floodplain Administrator prior to any permits being issued.

16. Fire hydrants must be provided in compliance with Fire Department specifications and a three foot fire hydrant, a 10 foot PUE is typically required and the fire hydrant can be in that easement if it cannot be within the right of way easement is required around all street frontage lot lines. Waivers of street improvements do not waive fire hydrant requirements.

17. All necessary utility easements shall be retained or reserved.

18. Approval of this application does not constitute approval of any other entitlement or any other necessary permit, license, or approval.

19. The developer shall pay all applicable processing fees, permit fees, City development fees, fire fees, school fees, drainage fees and other public entity fees in effect at the time of the issuance of the applicable permit.

20. The property owner/manager/HOA shall be responsible for the maintenance of all common areas, such as landscaping, parking, access roads, and easements.

21. With respect to any claim, action of proceeding against the City, its officials, employees or agents relating to the action or inaction of the City in reviewing, approving or denying entitlements of any type, the Developer agrees to indemnify, hold harmless and defend the City and its elected and appointed councils, boards, commissions, officers, agents, employees, and representatives from any and all claims, costs, and liability for claims of damage, for any property damage or personal injury, including death, which may arise as a result of any negligent acts or omissions by Developer or Developer's contractors, subcontractors, agents, or employees in connection with the construction, improvement, or operation, of the Project. Developer agrees to indemnify, hold harmless and defend the City and its officers, agents, employees, and representatives from any and all actions for damages caused or alleged to have been caused by Developer's activities in connection with the Project. This Agreement applies to all damages and claims for damages suffered or alleged to have been suffered arising out of or in connection to any and all Project operations, regardless of whether or not the City prepared, supplied or approved plans or specifications or both for the Project.

22. In the event any legal action or special proceeding is commenced by any person or entity challenging any agreements between Developer and City, any entitlement or component of the Project such as the Project EIR, or any other City approval for the Project (collectively, "Project Litigation"), the Parties agree to cooperate with each other as set forth herein. City may elect to tender the defense of any lawsuit filed and related in whole or in part to Project Litigation. Upon the commencement of Project Litigation, Developer will indemnify and hold harmless the City from all costs and expenses incurred related thereto, including, but not limited to, damages, attorneys" fees and expenses of litigation awarded to the prevailing party or parties in such litigation. Developer shall pay all litigation fees to the City within thirty (30) days of receiving a written request and accounting of such fees and expenses from the City. Notwithstanding the aforementioned, City may request a deposit to cover City's reasonably anticipated Project Litigation fees and costs, and Developer will provide such deposit to City within seven (7) days of any such request.

23. It is required by State Law (Business and Professional Code Section No. 5537 & 5538 and Section 302(b) of the Uniform Building Code) that all commercial buildings, new or existing must have a licensed professional designer (Architect, Civil or Structural Engineer) to design all changes of use or occupancy as well as new construction.

24. This approval may be recalled to the Planning Commission for review at any time due to complaints regarding lack of compliance with conditions of approval, traffic congestion, noise generation, or other adverse operating characteristics. At such time, the Commission may revoke the approval or add/modify conditions approval.

25. It is the responsibility of the applicant or developer to check with each agency for requirements that may pertain to their project.

26. The applicant shall negotiate school mitigation with the appropriate School District before issuance of building permit. Applicant shall present evidence of School District compliance to the City of Riverbank.

27. The project shall annex into a storm water management district for on-going maintenance of the public system.

28. The project shall annex into a Community facilities district for the on-going Public Services operations including Fire and Police services.

29. Where required, automatic fire sprinkler systems shall be designated and installed in compliance with NFPA (National Fire Protection Association) standards. Fire Department Connections (FDC‟s) shall be located within 50 feet of a fire hydrant.

30. The grade of the fire apparatus access road shall be within the limits established by the code official based on fire apparatus. (Shall not exceed 10 percent.)

31. Fire apparatus access roads shall be designated and maintained to support the imposed loads of fire apparatus (75,000 pounds) and shall be surfaced so as to provide all-weather driving capabilities.

32. Where applicable, NO PARKING – FIRE LANE signage and/or marking(s) shall be provided for fire apparatus access roads to identify such roads or prohibit the obstruction thereof.

33. All storm drains, which serve the site, shall be protected from spills and soil runoff (from unpaved parking areas). The applicant may use "Any Source Control" BMP (Best Management Practice) as listed in the California Storm Water Best Management Practice Handbook for storm water run-off for commercial and industrial sites. Storm drains will be inspected periodically.

34. The applicant shall comply with all regulations and code requirements of the Community Development Department, Public Works Department, Stanislaus Consolidated Fire Protection District, the Sheriff's Department and any other agencies requiring review of the project. If required, the applicant shall be responsible to insure that these agencies are supplied copies of the final building and site plans.

35. Developer shall provide written notification to adjacent property owners for any drainage work required to collect or convey storm water runoff, which may or will affect their properties.

36. Developer shall install off-street improvements determined necessary by the City Engineer to provide safe traffic conditions.

37. Developer shall underground existing and required on and off-site utilities as deemed necessary by the Public Works Department.

38. All off-site development shall comply with all applicable provisions of the Riverbank Municipal Code as determined by the City Engineer. Issuance of an encroachment permit will be

required whereby specific engineering requirements will be made as conditions of approval of that permit.

39. The property's alley frontage shall be improved, with improvements made to the satisfaction of the City Engineer in order to provide access as shown on the site plan and required by the Downtown Specific Plan.

B. ARCHITECTURE

1. All mechanical, irrigation, ground and/or roof mounted equipment shall be architecturally screened from view from all public right-of-ways prior to issuance of certificate of occupancy.

2. All trash enclosures shall be constructed of masonry material with self-enclosing doors and have a second access and a sloped roof. The enclosure shall have materials and colors consistent with the primary building.

3. All vents, gutters, downspouts, flashing, electrical conduits, etc., shall be painted or finished to match the color of the adjacent surface unless otherwise directed by the Planning Commission.

4. Soffits and other architectural elements visible from view but not detailed on the plans shall be finished in a material in harmony with the exterior of the building.

5. Finish quality of exterior design elements including, but not limited to, building façade landscaping shall be subject to approval of the Community Development Director prior to issuance of Certificate of Occupancy.

6. All signs shall be submitted to the Community Development Director for design review per the sign ordinance of the Riverbank Municipal Code.

7. All outdoor mechanical equipment, satellite dishes, fire main and all rooftop equipment shall be fully visually screened upon installation subject to the approval of the Community Development Department. Screening devices shall be shown on construction and/or landscape plans.

8. All exterior light fixtures shall be shown on plans subject to staff review and approval. All lights attached to buildings shall provide a soft "wash" of light against the wall. All building and parking or yard lights shall conform to City Standards and shall compliment the site and building architecture.

9. For residential projects, the CC&R's shall restrict the storage of recreational vehicles on this site or parcels unless they are the principle source of transportation for the owner and prohibit parking on the public street for long than 72 hours.

C. LANDSCAPING

1. Specific landscaping for screening shall have an appearance of mature growth subject to a field check and approval by the Community Development Director prior to Certificate of Occupancy.

2. The area under the drip line of all existing trees, which are to be saved, shall be fenced during construction. Grading shall be restricted under them to prevent soil compaction around the trees and to protect them from damage.

3. An existing tree inventory shall be created and included on the site plan for all new projects prior to approval of grading plan.

4. All slope banks in excess of two (2) feet in vertical height shall be landscaped and irrigated for erosion control and to soften their appearance as follows: one 15-gallon or larger size tree per each 150 sq. ft. of slope area, one 1- gallon or larger size shrub per each 100 sq. ft. of slope area, and appropriate ground cover 12-24 inches on-center. In addition, slope banks in excess of five (5) feet in vertical eight also include one 5-gallon or larger size tree per each 250 sq. ft. of slope area. Trees and shrubs shall be planted in staggered clusters to soften and vary slope plane. Slope planting required by this condition shall include a permanent irrigation system to be installed by the developer prior to occupancy.

5. All planting shall be maintained in good growing condition. Such maintenance shall include, where appropriate, pruning, mowing, weeding, cleaning of debris and trash, fertilizing and regular watering. Whenever necessary, planting shall be replaced with other plant materials to insure continued compliance with applicable landscaping requirements. Required irrigation systems shall be fully maintained in sound operating condition with heads periodically cleaned and replaced when missing to insure continued regular watering of landscape areas, and health and vitality of landscape materials.

6. Final inspection for occupancy permits will not be granted until all construction and landscaping is complete in accordance with approved plans.

7. All landscape areas shall be maintained in a healthy, thriving and weed free condition.

8. The site shall be maintained in a neat and clean manner free of trash and debris.

9. All walls adjacent to public right-of-ways shall be provided with decorative treatment, subject to approval by the Community Development Director. Walls shall match or harmonize with existing sound walls of neighboring projects along that street.

D. IMPROVEMENT PLANS

1. All utilities shall be installed in conformance with existing City policy including without limitation the City of Riverbank Subdivision, Zoning Ordinances and the Downtown Specific Plan (DTSP).

2. Right of way or easement acquisitions necessary to implement any portion of this map, and/or site development plan, including public improvements, shall be obtained by the developer at its sole expense prior to the City's consideration of the final map which encompasses the particular improvement. The developer shall notify the City in writing no more than 120 days and no less than 60 days in advance of filing the final map related to the acquisition if City assistance is needed to complete the acquisition pursuant to Government Code Section 66462.5. Funds in an amount of 100% of the estimated acquisition costs shall be deposited with the City to cover appraisal, right of way agent, and legal fees and costs incurred to secure the necessary property.

3. Environmental and engineering studies, as directed by the Community Development Director, must be complete and on file prior to commencement to plan checking.

4. Developer shall install off-street improvements determined necessary by the City Engineer to provide safe traffic conditions.

5. The Applicant shall submit a complete area water pressure availability study for all phases of the Project prior to issuance of any development permits. If the study indicates that the present system is inadequate, the Applicant must provide plans, with existing water, sewer and utilities software simulation program that will demonstrate any remedial action necessary to abate the deficiency and shall submit for plan check and take all necessary actions at the applicant’s expense.

6. All site development shall comply with all applicable provisions of the City of Riverbank Municipal Code as determined by the City Engineer. Issuance of a site development permit will be required whereby specific engineering requirements will be made as conditions of approval of that permit.

7. Meters, hydrants, poles, etc. shall be located clear of the sidewalk and driveways or as determined by the City Engineer. Final locations and the number of such facilities shall be

determined at the time the improvement plans are reviewed.

8. An encroachment permit shall be required for any construction to be done in the public right of way, in easements, or on lands to be dedicated to the City of Riverbank upon completion of the improvements. The encroachment permit shall be obtained prior to the start of said work. The permit fees shall be determined per the current adopted development fee schedule.

9. Due to LID requirements, on site storage, retention/detention should be permitted.

10. Any portion of the drainage system that conveys runoff from public streets shall be installed within a dedicated drainage easement or public street.

11. The developer shall provide joint trenching for telephone, gas, electric, cable TV and fiber optic service for every parcel.

12. All improvements, public and private, shall be designed and constructed in accordance with the most recent edition of the Standard Plans and Specifications all applicable state and local ordinances, standards and requirements. Should a conflict arise, the governing specification shall be determined by the City Engineer.

13. All public improvements proposed by the developer or required through these conditions of approval shall be completed and accepted by the City in compliance with the time schedule set forth in the conditions of approval; if no time schedule is provided, then no later than recordation of the parcel map. The developer may apply to the City for a Subdivision Improvement Agreement or Deferred Improvement Agreement in order to postpone completion of the public improvements. In any event, the City shall require the developer to guarantee the performance of the improvements and payment of labor and materials by furnishing security in a form acceptable to the City.

14. Developer shall ensure finished pad elevations are at a minimum one foot above the 100-year base flood elevation as shown on the latest Federal Emergency Management Agency (FEMA) floodplain maps for Stanislaus County, California. The developer shall be responsible for all necessary activities, applications, documentation and costs to amend floodplain maps for their development. [Letter of Map Amendment Revision (LOMAR)], and for obtaining a Floodplain Permit from the Community Development Director for all projects on parcels identified in Zone "A" on the FEMA Flood Insurance Rate Maps for the City of Riverbank. Application for LOMAR shall be prepared and submitted by the developer prior to grading permit issuance or final map approval, whichever occurs first.

15. Regional and Sub-regional Drainage fees shall be paid in an amount acceptable to the City Engineer prior to approval of the final map.

16. Detailed plans reflecting the design and construction of all public infrastructure improvements for street, sewer, water, and storm drain, both on- and off-site, shall be in conformance with the adopted Infrastructure Master Plans and as directed by the City Engineer. Developer shall have written approval from the City Engineer for any variations from the City's Master Plans prior to any final map or plan approval.

17. All on and off-site development and improvements shall be designed and constructed at the sole expense of the developer. The developer may apply for reimbursement for those improvements deemed eligible by the City Engineer as oversized in accordance with the City's laws and the State Subdivision Map Act in effect at the time of the developer's application for reimbursement to the City Council. Any such application must be presented to the City Council on or before the City records the first final map. The City's method of reimbursement shall not be limited, and may be memorialized through a reimbursement agreement with the Developer.

18. The sub divider shall submit plans and specifications for improvements of all public and private street rights-of-way, drainage easements, culverts, drainage structures and drainage facilities to the Department of Public Works for approval by the City Engineer.

19. Street alignments and grades, including the change of any existing or proposed street alignment and grade, shall be as required by the Community Development Director and the City Engineer.

20. The exact depth of imported base material shall be based on soil tests which have been approved by the Director of the Department of Public Works.

21. Sight distance requirements at all street intersections shall conform to City Standards.

22. If the improvement plans show a need to excavate in any public road right-of-way, the developer shall place a cash deposit with the Department of Public Works to ensure that any damage to the existing roadway is repaired in a timely manner.

23. Portland cement concrete cross gutters or culverts shall be installed where water crosses the roadways.

24. An adequate energy dissipater shall be constructed at the outlet of the storm drain, or verification shall be provided that such improvement is not needed.

25. Hydrology and hydraulic calculations for determining the storm system design, with water surface profile and adequate field survey cross section data, shall be provided satisfactory to the Director of the Department of Public Works, or verification shall be provided that such calculations are not needed.

26. Developer shall submit a study addressing on and off-site storm water and/or sewer

system capabilities. If the study indicates that the present systems are inadequate, the developer must provide plans and install any additional storm water and/or sanitary and sanitary sewer facilities, including off-site improvements, to correct storm water run-off and sanitary sewer demands anticipated for upstream build-out in accordance with the Riverbank General Plan.

27. Prior to occupancy, the developer shall supply the City with an ACAD computer disk file showing plans that reflect the project as it was built (As-Builts) to the satisfaction of the City Engineer. These plans shall be 3D.

28. The installation (if required) of all gas, electric, sewer, and water lines and any other below surface utilities is to take place before the installation of any concrete curbs, gutter, sidewalks, and the surfacing of the streets.

29. All walls adjacent to public right-of-ways shall be provided with decorative treatment, subject to approval by the Community Development Director.

E. GRADING PLANS

1. Prior to the issuance of any grading permits, if the applicant submits a grading plan which the City Engineer, determines to show a significant deviation from the grading shown on the approved tentative map, specifically with regard to slope heights, slope ratios, pad elevations or pad configuration, the Planning Commission shall review the plan for a finding of substantial conformance. If the Planning Commission fails to make such a finding, the applicant shall process a revised tentative map; or, if a final map has been recorded, the applicant shall process a new tentative map or a site development permit application per City of Riverbank Municipal Code. Additionally, the applicant shall process a new environmental assessment for determination by the decision making entity.

2. Prior to the issuance of a grading permit, the applicant shall submit a geotechnical report to the City Engineer, Subdivision and Grading, for approval. The report shall include the information and be in the form as required by the City Engineer

3. Prior to the issuance of any preliminary grading permits, the applicant shall provide evidence to the City Engineer, that the Vector Control District has surveyed the site to determine if vector control measures are necessary. If the District determines measures are warranted, the applicant shall conduct such measures in a manner meeting the approval of the City Engineer.

4. Prior to the issuance of any grading permit or revisions thereto, the Community Development Director shall determine that the proposed grading is consistent with the grading depicted within this approved planning application.

5. The sub divider shall submit grading plans, a permit application, and plan check and inspection fees and deposits to the Department of Public Works. Grading plans shall be approved prior to or concurrently with the approval of the Improvement Plans.

6. The grading plan shall contain a certificate signed by a registered civil engineer that the grading plan has preserved a minimum of 100 square feet of solar access for each lot created by this subdivision pursuant to Section 81.401(n) of the Subdivision Ordinance.

7. Finished grading shall be certified by a registered civil engineer and inspected by the City Engineer for drainage clearance. Approval of rough grading does not certify finished grading due to potential surface drainage problems that may be created by landscaping accomplished after rough grading certification.

8. Developer shall provide written notification to adjacent property owners for any drainage work required to collect or convey storm water runoff, which may or will affect their properties.

9. 6” high Portland Concrete Cement curbing shall be provided between all driveways and landscaped areas as indicated in the City of Riverbank Standard Plans and Specifications. In addition to above, curbing between length of parking space and landscaped area shall include a 12” wide “Courtesy Curb.” Curb Cuts shall be allowed to conform to LID Standards.

10. During construction water trucks or sprinkler systems are to be used in sufficient quantities to prevent dust from leaving the site during any earthmoving and/or construction activities.

CITY OF RIVERBANK
PLANNING COMMISSION
STAFF REPORT

ITEM NO:	**3.2**	**May 20, 2025**

APPLICATION: **Architecture & Site Plan Review 11-2024 (Dept. File 24-0029) – Commercial Office (APN: 132-011-051).** The Applicant is requesting an Architecture and Site Plan Review to establish a commercial office located at 3205 Sierra Street.

OWNER: Ana M Merlo
2625 Rose Hill Lane
Riverbank, CA 95367

APPLICANT: Ana M Merlo
2625 Rose Hill Lane
Riverbank, CA 95367

LOCATION: 3205 Sierra Street; APN: 132-011-051

GENERAL PLAN: Mixed Use (MU)

ZONING: Light Industrial (M-1)

DOWNTOWN SPECIFIC PLAN: Mixed Use (MU)

ENVIRONMENTAL DETERMINATION: Pursuant to CEQA Guidelines, the proposed project is exempt per Article 19, Section 15301 – Existing Facilities

PROJECT PLANNER: Michael Arroyo, Contract Planner

RECOMMENDATION: Adopt Resolution No. 2025-005, approving Architecture and Site Plan Review No. 11-2024.

ACRONYMS:
CEQA – California Environmental Quality Act
CFD – Community Facilities District
DU – Dwelling Units
LDR – Low Density Residential
LID – Low Impact Design
RMC – Riverbank Municipal Code
TM – Tentative Map

I. EXECUTIVE SUMMARY

The proposed Project consists of the conversion of an uninhabited residential structure to a commercial office for property located at 3205 Sierra Street. The existing structure is approximately 946 sq. ft. in size and is in need of exterior improvements along with landscape and accessibility improvements. The Applicant is proposing to improve the exterior of the building along with modifications and improvement to the interior of the existing structure with various site improvements. The Applicant intends to operate their locally owned real estate business from this location should the proposed Project be approved.

II. BACKGROUND AND ANALYSIS

The subject property is approximately 6,250 sq. ft., and has existing frontage improvements installed including curb, gutter, and sidewalk. The Project site is bounded by Sierra Street to the south, 2nd Street to the west, Stanislaus Street to the north and 3rd Street to the east. The picture below illustrates the location of the proposed Project and surrounding properties.

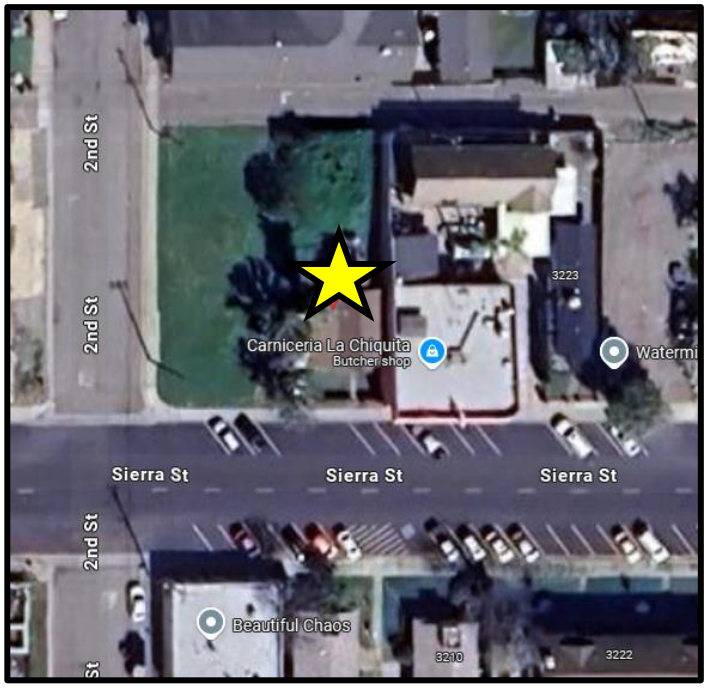

The subject property has a General Plan Land Use designation of Mixed Use (MU) and properties with this designation are anticipated to be developed to accommodate

neighborhood-scale retail uses, offices, personal and commercial services, and other similar land uses. Thus, the proposed Project is consistent with the City's General Plan Land Use designation of Mixed Use.

Further, the subject property is located within the City's Downtown Specific Plan (DTSP) and sits within the Mixed Use (MU) district zone. The MU zone encourages new investment to create an urban neighborhood in the DTSP. Per the DTSP, development of the many sites within the specific plan provides opportunities for new investment that complements existing residences and businesses. The MU zone allows workplace uses including professional office uses that are consistent in scale and character with downtown that also support downtown's pedestrian-friendly environment. The subject property sits directly adjacent to Carniceria La Chiquita to the east and a vacant lot located to the west. Additional commercial businesses are located to the south including the Nutrition Zone and Beautiful Chaos, a nail and beauty spa. The proposed use of a commercial real estate office is consistent with the surrounding businesses and would contribute to the expansion and revitalization of Riverbank's downtown.

The proposed Project does not propose expansion of the existing structure nor is the footprint proposed to be enlarged. In fact, many of the improvements required to convert the single-family dwelling to an office use can be characterized as accessibility related improvements. Thus, the proposed Project is consistent with the permitted uses and development standards of the DTSP, and will be conditioned to adhere to these established standards.

ARCHITECTURE & SITE PLAN REVIEW

The Applicant is proposing improvements to both the interior and exterior of the existing structure. While no expansion of the existing structure is proposed, a new concrete walkway will be constructed extending from the sidewalk to the entrance of the proposed office. Further, an accessible path of travel will be provided by way of a new ADA compliant ramp including a 60" x 48" truncated dome panel ensuring an easy, smooth transition from the existing driveway to the office's entrance and landing.

Presently, the subject property is considered a single-family dwelling with neglected landscape. Improvements to the subject property's frontage such as landscaping are required. Because buildings are slightly setback from neighborhood streets within the DTSP, landscaping and open space supports pedestrian activity and provides a positive curb appeal for residents and visitors passing through the downtown area. As such, Model Water Efficient Landscape (MWELO) compliant improvements will be installed highlighted by new artificial grass turf. Not only will these improvements enhance the subject property's street frontage, it will also positively contribute to the appeal of the properties within the vicinity.

The exterior of the structure will be further enhanced. The wood siding will receive a new, fresh coat of Sherwin Williams alabaster-colored paint; the windows and door wood trim will be painted with Sherwin Williams rose-colored paint, and the wood fascia board will also be painted with the rose-colored paint. Lastly, the entrance door will also be painted with a new coat of Sherwin Williams alabaster-colored paint. These improvements will give the existing structure's exterior a face-lift and when combined with the new landscaping, concrete walkway and ADA compliant ramp, the proposed Project will be consistent with the Revitalization Strategies of the Downtown Specific Plan.

Lastly, the Applicant is improving the interior of the structure. Proposed improvements include two (2) new offices, a new reception area, and a new waiting area for clients. In an effort to bring the existing structure up to ADA code, in conjunction with the proposed ADA ramp, the Applicant is proposing to improve one (1) lavatory to meet ADA standards. The lavatory will be outfitted with a new ADA compliant toilet and wall handrail, a new 36" x 82" wood door. The new lavatory will provide a minimum 60" clearance for guests to navigate with ease.

III. GENERAL PLAN CONSISTENCY

The Architecture and Site Plan Review is consistent with the following General Plan policies:

Policy DESIGN-8.3 "The City will require the use of durable, high quality building materials to lower maintenance and replacement needs and ensure the aesthetic appeal of new development and rehabilitation."

The proposed improvements to the existing structure will improve the overall aesthetic to the site, which will improve the view along Sierra Street and enhance the surrounding commercial properties.

Policy DESIGN-10.1 "The City will require site and building access for pedestrians…by providing the most direct pedestrian access from sidewalks and parking areas to building entrances while minimizing conflicts with motor vehicle traffic."

The existing sidewalks on Sierra Street will lead citizens directly to the entrances. The proposed ADA compliant ramp will also help provide direct access to the site. Pedestrians will have a safe path of travel to access the proposed business. With the incorporation of the conditions of approval, staff believes the findings can be made and would recommend approval of the Architectural and Site Plan Review application.

IV. ENVIRONMENTAL DETERMINATION

Pursuant to the California Environmental Quality Act, the proposed Project is exempt pursuant to CEQA Guidelines Section 15301, Existing Facilities

V. PUBLIC NOTICE

On May 5, 2025, public notices for the Planning Commission hearing were mailed to interested parties and property owners within 300 feet of the project location. The Planning Commission hearing notice was published in the Riverbank News on May 7, 2025. The notice was posted on the City's website and physically posted at City Hall North, South, the post office and sent to the library on May 5, 2025. The subject property public notice sign was posted on May 5, 2025.

VI. RECOMMENDATION

Adopt Resolution No. 2025-005, approving Architecture and Site Plan Review No. 11-2024.

VII. ATTACHMENTS

1. Planning Commission Resolution No. 2025-005
   Exhibit A – Plans and Elevations
   Exhibit B – Conditions of Approval

Respectfully Submitted By:

Michael Arroyo

Michael Arroyo
Contract Planner

City of Riverbank
Planning Commission
Resolution No. 2025-005

APPROVAL OF ARCHITECTURE SITE PLAN REVIEW 11-2024 FOR AN OFFICE CONVERSION FOR PROPERTY LOCATED AT 3205 SIERRA STREET APN: 132-011-051

WHEREAS, an Architecture and Site Plan Review application has been received from Ana Merlo with a proposal to establish a commercial office located at 3205 Sierra Street (APN: 132-011-051); and

WHEREAS, the Project site has a General Plan Land Use designation of Mixed Use (MU) and zoning designation of Light Industrial (M-1); and

WHEREAS, the Project site also has a Downtown Specific Plan zoning designation of Mixed Use (MU); and

WHEREAS, the proposed Project is consistent with the City of Riverbank's General Plan Land Use designation and Downtown Specific Plan zoning designation; and

WHEREAS, the proposed Project is consistent with the permitted uses of the Mixed-Use designation of the Downtown Specific Plan which allows professional office uses; and

WHEREAS, the Planning Commission held a public hearing on May 20, 2025, to consider Architecture and Site Plan Review 11-2024 and take public comment; and

WHEREAS, the proposed Project is exempt from analysis pursuant to the California Environmental Quality Act (CEQA) Guidelines Section 15301, Existing Facilities; and

WHEREAS, the City of Riverbank Planning Commission made the following findings:

1. The proposed Project, together with the provisions for its design and improvements, is consistent with the goals, policies, program and uses of the General Plan.

2. The proposed Architecture and Site Plan Review along with the Conditions of Approval is in conformity with both the intent and provisions of the Zoning Ordinance, Title 153, of the City of Riverbank Code of Ordinances.

WHEREAS, the proposed project is consistent with the following aspects of the General Plan:

1. Policy DESIGN-8.3: The City will require the use of durable, high quality building materials to lower maintenance and replacement needs and ensure the aesthetic appeal of new development and rehabilitation.

2. Policy DESIGN-10.1: The City will require site and building access for pedestrians…by providing the most direct pedestrian access from sidewalks and parking areas to building entrances while minimizing conflicts with motor vehicle traffic.

WHEREAS, the plans and elevations of Sammy Allatry are hereby granted and approved, subject to the following conditions:

1. Applicant shall comply with the Project specific Conditions of Approval as outlined in "**Exhibit B**"; and

2. The applicant shall build the entire project according to the floor plans and elevations date stamped April 15, 2025 and on file with the Community Development Department and as presented to the Planning Commission as part of this action.

NOW THEREFORE, BE IT RESOLVED by the City of Riverbank Planning Commission that Architecture and Site Plan Review 11-2024 is hereby approved, subject to those conditions established by Resolution No. 2025-005 and as illustrated in "**Exhibit A**" Plans and Elevations.

PASSED AND ADOPTED by the Planning Commission of the City of Riverbank at a meeting held on the 20th of May, 2025; motioned by Commissioner _____, seconded by Commissioner _____, and upon roll call was carried by the following vote of __-__:

AYES: Commissioners:

NOES:

ABSENT:

ABSTAIN:

Attest: **Approved:**

_____ _____

Joshua E. Mann, Taide Zamora, Chairperson
Community Development Director Planning Commission

Exhibit A – Plans and Elevations
Exhibit B – Conditions of Approval

Exhibit A - Plans and Elevations

CONVERSION OF EXISTING SINGLE FAMILY HOME TO OFFICE/ COMMERCIAL USE

3205 SIERRA STREET
RIVERBANK,CA 95367

AGG	AGGREGATE	INT	INTERCOM
A/C	AIR CONDITIONER	INTR	INTERIOR
AL	ALUMINUM	JT	JOINT
AB	ANCHOR BOLT	LB	LAGBOLT
@	AT	LAV	LAVATORY
ABV	ABOVE	LT	LIGHT
BLK'G	BLOCKING	MAX	MAXIMUM
BD	BOARD	MIN	MINIMUM
BUR	BUILT UP ROOFING	NIC	NOT IN CONTRACT
CB	CATCH BASIN	NTS	NOT TO SCALE
CCJ	CONCRETE COLD JOINT	O/	OVER
CJ	COLD JOINT	OBS	OBSCURE
CFCI	CONTRACTOR FURNISHED CONTRACTOR INSTALLED	OC	ON CENTER
CLG	CEILING	OFCI	OWNER FURNISHED CONTRACTOR INSTALLED
COL	COLUMN	OFOI	OWNER FURNISHED OWNER INSTALLED
CONC	CONCRETE		
CMU	CONCRETE MASONRY UNIT	OH	OVERHEAD
CONT	CONTINUOUS OR CONTINUE	PVMT	PAVEMENT
DET	DETAIL	PL	PLATE
DIAG	DIAGONAL	PLN	PLAN
DS	DOWN SPOUT	PLYWD	PLYWOOD
DWGS	DRAWINGS	PT	PRESSURE TREATED
DIA	DIAMETER	RAD	RADIUS
EJ	EXPANSION JOINT COVER	RD	ROOF DRAIN
ELECT	ELECTRICAL	RFG	ROOFING
ELEV	ELEVATION	RM	ROOM
EQ	EQUAL	SCH	SCHEDULE
(E)	EXISTING	SHT	SHEET
EXH	EXHAUST	SIM	SIMILAR
EXT	EXTERIOR	SPEC	SPECIFICATION
FOS	FACE OF STUD	SQ	SQUARE
FLUOR	FLUORESCENT	STD	STANDARD
FIN	FINISH(ED)	STOR	STORAGE
FLR	FLOOR	SYS	SYSTEM
FD	FLOOR DRAIN	TEL	TELEPHONE
FTG	FOOTING	THK	THICK
FND	FOUNDATION	T&G	TONGUE & GROOVE
GA	GAUGE	TYP	TYPICAL
GALV	GALVANIZED	UON	UNLESS OTHERWISE NOTED
GL	GLASS OR GLAZING	VAC	VACUUM
GYP BD	GYPSUM DRY WALL	V	VACUUM (WALL OUTLET)
HDR	HEADER	WC	WATER CLOSET
HVAC	HEATING / VENTILATION/ AIR CONDITIONING	WD	WOOD
		W/O	WITHOUT
HT	HEIGHT	WP	WEATHER OR WATER PROOF
HORIZ	HORIZONTAL		
HB	HOSE BIBB		

ABBREVIATIONS

NORTH ARROW

SECTION LETTER
DIRECTION OF VIEW
SHEET NUMBER WHERE SECTION IS DRAWN
SECTION CUT

DETAIL NUMBER
DIRECTION OF VIEW
SHEET NUMBER WHERE SECTION IS DRAWN
DETAIL CUT

STATION / COLUMN LINE

X'-X"
ELEVATION

DETAIL ENLARGEMENT

ELEVATION NUMBER

SHEET NUMBER

DOOR NUMBER

WINDOW NUMBER

ROOM NUMBER

SYMBOL LEGEND

OCCUPANCY:	B
TYPE OF CONSTRUCTION:	V-B
ZONING:	COMMERCIAL
APN:	132-011-051-000
SITE AREA	(.144 ACRES) 6,251 S.F.

PROJECT INFORMATION: CONVERSION OF EXISTING SINGLE FAMILY HOME TO OFFICE/COMMERCIAL USE

(E) BUILDING NUMBER OF STORIES	1
(E) BUILDING:	946 S.F.

CODE REVIEW: THIS PROJECT WILL CONFORM TO THE:

CALIFORNIA BUILDING CODE	2022 EDITION
CALIFORNIA RESIDENTIAL BUILDING CODE	2022 EDITION
CALIFORNIA MECHANICAL CODE	2022 EDITION
CALIFORNIA PLUMBING CODE	2022 EDITION
CALIFORNIA ELECTRICAL CODE	2022 EDITION
CALIFORNIA ENERGY CODE	2022 EDITION
CALIFORNIA FIRE CODE	2022 EDITION
CALIFORNIA GREEN BUILDING STANDARD	2022 EDITION

PROJECT DATA

PROJECT SITE

NORTH

VICINITY MAP

1. WHERE NEW WORK TIES INTO EXISTING CONTRACTOR SHALL PATCH AND REPAIR EXISTING CONSTRUCTION AS REQUIRED TO RESTORE IT TO ITS ORIGINAL FINISH. TIE THE NEW WORK INTO EXISTING IN A NEAT AND CRAFTSMAN LIKE MANNER SO THAT NEW BLINDS WITH A SMOOTH AND LEVEL SURFACE INTO ADJACENT WORK.
2. THE CONTRACTOR SHALL CHECK ALL DIMENSIONS AT THE JOB . ANY DISCREPANCY BETWEEN DRAWINGS AND ACTUAL WORK SHALL BE BROUGHT TO THE ATTENTION OF THE ARCHITECT FOR CORRECTION PRIOR TO COMMENCING WITH THE WORK.
3. IT IS NOT INTENDED THAT THE CONTRACT DOCUMENTS INCLUDE EACH AND EVERY SUBSYSTEM AND SUBCOMPONENT NECESSARY TO FULLY AND PROPERLY COMPLETE THE WORK. SUBSYSTEMS, SUBCOMPONENTS OR DETAILS REQUIRED OR NORMALLY INCLUDED AS TRADE PRACTICE MAY NOT BE SPECIFICALLY MENTIONED OR SHOWN. NEVERTHELESS, CONTRACTOR SHALL BE RESPONSIBLE FOR EACH ELEMENT OF THE WORK.
4. WHEN INSTALLING DRILLED-IN ANCHORS AND/OR POWDER DRIVEN PINS IN EXISTING NON-PRESTRESSED REINFORCED CONCRETE, USE CARE AND CAUTION TO AVOID CUTTING OR DAMAGING THE EXISTING REINFORCING BARS. WHEN INSTALLING THEM INTO EXISTING PRE STRESSED TENDONS, USE A NONDESTRUCTIVE METHOD PRIOR TO INSTALLATION. EXERCISE EXTREME CARE AND CAUTION TO AVOID CUTTING OR DAMAGING THE TENDONS.
5. ALL WORK SHALL BE DONE IN A NEAT AND WORKMAN LIKE MANNER ACCORDING TO THE BEST TRADE PRACTICE BY THOSE SKILLED IN THE PARTICULAR TRADE, EQUIPMENT, FIXTURES, PIPING, ETC., SHALL BE PLUMB, LEVEL, SQUARE OR CENTERED ETC., EQUIPMENT TO BE INSTALLED IN STRICT COMPLIANCE WITH MANUFACTURERS' RECOMMENDATIONS.
6. ALL EXISTING CONDITIONS NOT SHOWN OR INDICATED ON THESE PLANS ARE TO REMAIN UNCHANGED. FIELD VERIFY EXISTING CONDITIONS AND ALL DIMENSIONS. ANY DISCREPANCY BETWEEN DRAWINGS AND ACTUAL WORK SHALL BE BROUGHT TO THE ATTENTION OF THE ARCHITECT FOR CORRECTION PRIOR TO COMMENCING WITH THE WORK.
7. ALL DIMENSIONS ON THE PLANS ARE TO THE FACES OF STUDS OR CENTERED ON COLUMN. A-DOOR AND CASED OPENINGS WITHOUT LOCATION DIMENSIONS ARE TO BE FOUR (4) INCHES FROM FACE OF ADJACENT PARTITION OR CENTERED BETWEEN PARTITIONS. B- ALIGNMENT TAKE PRECEDENT OVER DIMENSIONS. VERIFY ALL DIMENSIONS AND CONDITIONS AND NOTIFY ARCHITECT OF ANY DISCREPANCIES.
8. THE CONTRACTOR SHALL BE RESPONSIBLE FOR CLEANING UP AND REMOVING FROM THE JOB SITE ALL TRASH AND DEBRIS IMMEDIATELY UPON COMPLETION OF HIS DAILY WORK.
9. CONSTRUCTION SHALL COMPLY WITH APPLICABLE EDITION OF CALIFORNIA BUILDING CODE, ALL APPLICABLE LOCAL, STATE AND FEDERAL CODES, ORDINANCES, LAWS, REGULATIONS AND PROTECTIVE COVENANTS GOVERNING THE WORK. IN CASE OF CONFLICT, THE MORE STRINGENT REQUIREMENT SHALL GOVERN.
10. CONTRACTOR AND HIS OR HER SUBCONTRACTOR TO HAVE WORKING KNOWLEDGE OF ALL CODES APPLICABLE TO THEIR WORK.
11. COORDINATE ALL WORK AND CONSTRUCTION SCHEDULING WITH OWNER.
12. THE CONTRACTOR SHALL BE RESPONSIBLE TO PROVIDE BARRICADES, PROTECTIVE COVERINGS, WARNING SIGNS, ETC. TO PREVENT ANY HARM TO WORKERS, EMPLOYEES AND/OR THE GENERAL PUBLIC
13. GENERAL CONTRACTOR SHALL MAKE AVAILABLE COMPLETE SETS OF CONSTRUCTION DOCUMENTS TO HIS OR HER SUBCONTRACTORS FOR REVIEW. EACH SUBCONTRACTOR SHALL BE RESPONSIBLE FOR REVIEWING THE COMPLETE SETS AND COORDINATING ITEMS WHICH PERTAIN TO HIS OR HER WORK WITH OTHER TRADES PRIOR TO COMMENCING WITH THE WORK.
14. THE CONTRACTOR SHALL PROVIDE MOUNTING PLATES AS REQUIRED BEHINDE ALL WALL MOUNTED ITEMS SUCH AS HANDRAILS, GRAB BARS, TOILET PARTIONS, LIGHT FIXTURES, EQUIPMENT, ETC.
15. CONTRACTOR IS RESPONSIBLE FOR IDENTIFYING EXISTING HAZARDOUS MATERIALS (ie; ASBESTOS, LEAD PAINT, ETC.). SHOULD THE CONTRACTOR ENCOUNTER SUCH MATERIALS, CONTACT THE OWNER IMMEDIATELY FOR DIRECTIONS FOR REMOVAL AND DISPOSAL.
16. THE BID PRICE SHALL INCLUDE EVERYTHING REQUIRED TO COMPLETE THE WORK REQUIRED AS INDICATED IN THE CONSTRUCTION DRAWINGS AND SPECIFICATIONS TO HAVE A FINISHED WORK. ANYTHING OMITTIED THEREFROM WHICH IS CLEARLY NECESSARY FOR THE COMPLETION OF THE WORK OR ITS APPURTENANCE SHALL BE CONSIDERED A PORTION OF THE WORK ALTHOUGH NOT DIRECTLY SPECIFIED OR SHOWN ON THE DRAWINGS.
17. ALL NEW WALL AND CEILING FINISHES, (COVERINGS AND PAINTS) SHALL HAVE A FLAME SPREAD RATING OF 200 OR LESS.
18. ALL NEW WALL AND CEILING FINISHES SHALL HAVE A SMOKED -DEVELOPED INDEX OF NOT GREATER THEN 450.

GENERAL NOTES

NONE

DEFERRED APPROVAL

SHEET NO.	DESCRIPTION
T-1	COVER SHEETS-GENERAL PROJECT INFORMATION
SP-1	SITE PLAN/ HANDICAPPED RAMP FLOOR PLAN AND ELEVATION
SP-2	LANDSCAPING PLAN
A-1	FLOOR PLAN/ ELECTRICAL PLAN AND HANDICAP ACCESSIBLE DETAILS
A-2	EXTERIOR ELEVATIONS

SHEET INDEX

DESIGN

PROJECT INFORMATION:

CONVERSION OF EXISTING SINGLE FAMILY HOME TO OFFICE /COMMERCIAL USE

3205 SIERRA STREET
RIVERBANK, CA 95367

CURRENT ISSUE DATE:

11/25/24

ISSUED FOR:

PERMIT

REV.:	DATE:	DESCRIPTION:	BY:

OWNER:

ANA MERLO
2625 ROSE HILL LN.
RIVERBANK, CA 95367

PLANS DRAWN BY:

PERRY DELA CRUZ
2265 VALENCIA COURT
TRACY, CA 95377

DRAWN BY:	CHK.:	APV.:
PD	PD	PD

CONTRACTOR

SHEET TITLE:

COVER SHEET GENERAL PROJECT INFORMATION

SHEET NUMBER:

T-1

Xref .\TB RAFEBAN.dwg

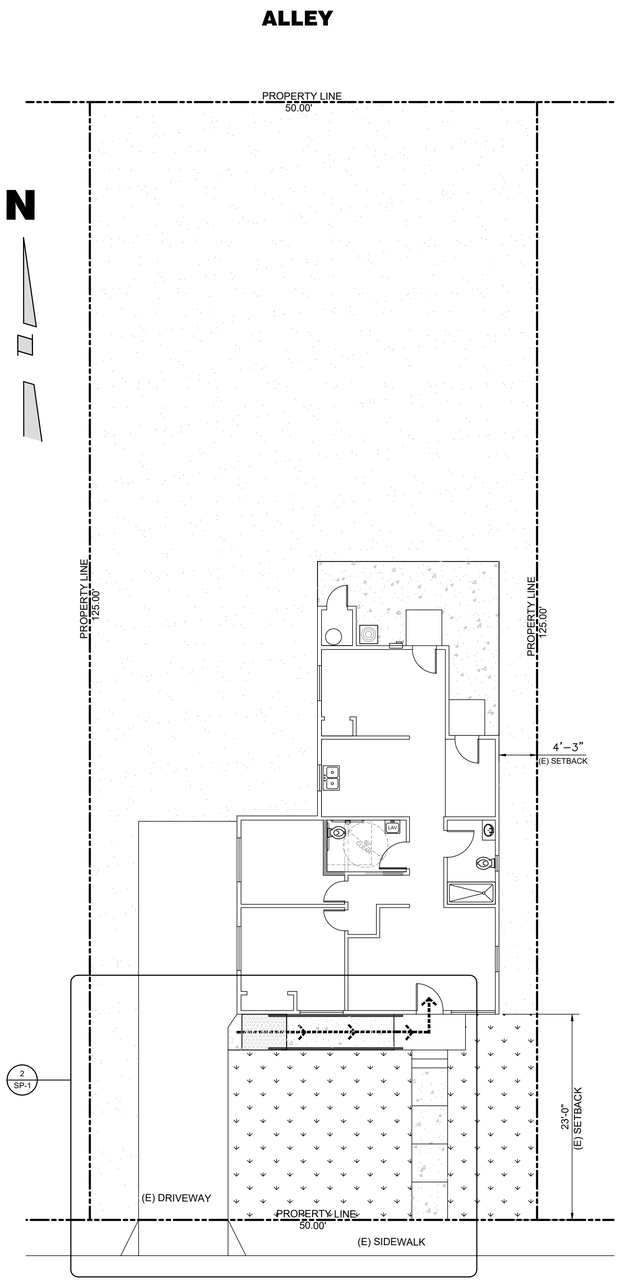

3 SITE PLAN

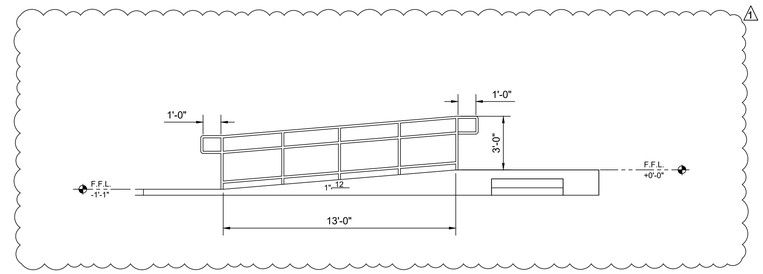

1 RAMP ELEVATION

SCALE
1/4" = 1'-0"

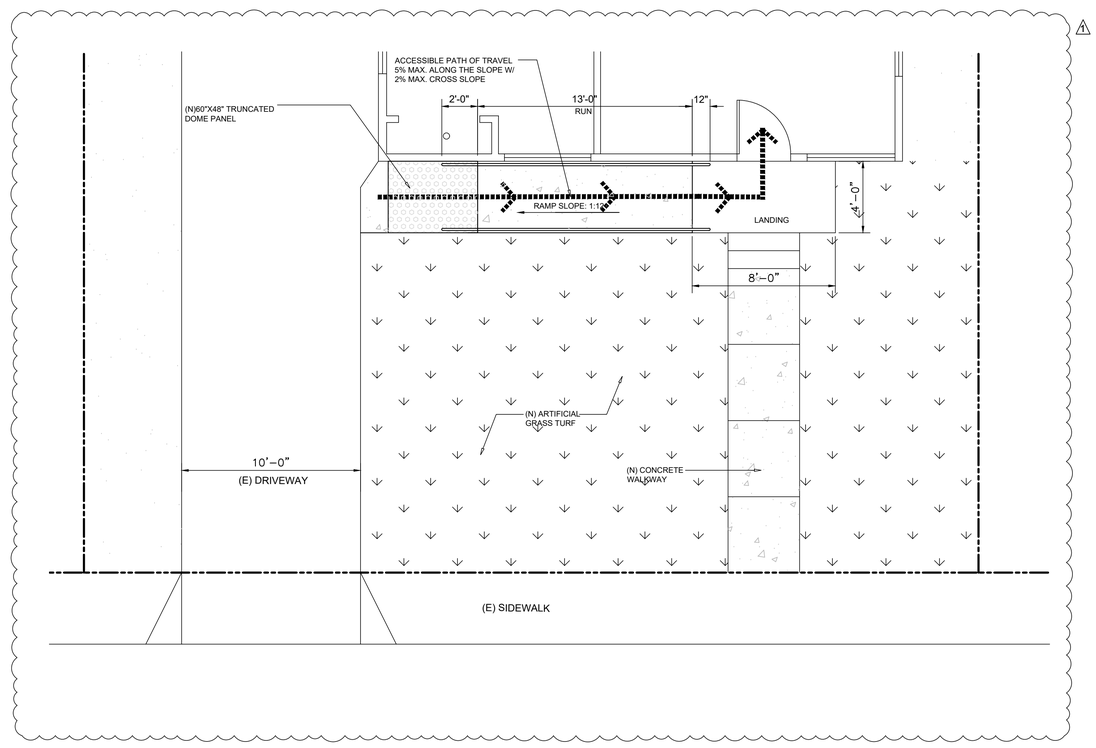

2 HANDICAPPED RAMP FLOOR PLAN

SCALE
1/4" = 1'-0"

DESIGN

PROJECT INFORMATION:

CONVERSION OF EXISTING SINGLE FAMILY HOME TO OFFICE /COMMERCIAL USE

3205 SIERRA STREET
RIVERBANK, CA 95367

CURRENT ISSUE DATE:

11/25/24

ISSUED FOR:

PERMIT

REV.:	DATE:	DESCRIPTION:	BY:
1	04-12-25	PLAN CHECK	

OWNER:

ANA MERLO
2625 ROSE HILL LN.
RIVERBANK, CA 95367

PLANS DRAWN BY:

PERRY DELA CRUZ
2265 VALENCIA COURT
TRACY, CA 95377

DRAWN BY:	CHK.:	APV.:
PD	PD	PD

CONTRACTOR:

SHEET TITLE:

SITE PLAN / HANDICAPPED RAMP FLOOR PLAN AND ELEVATION

SHEET NUMBER:

SP-1

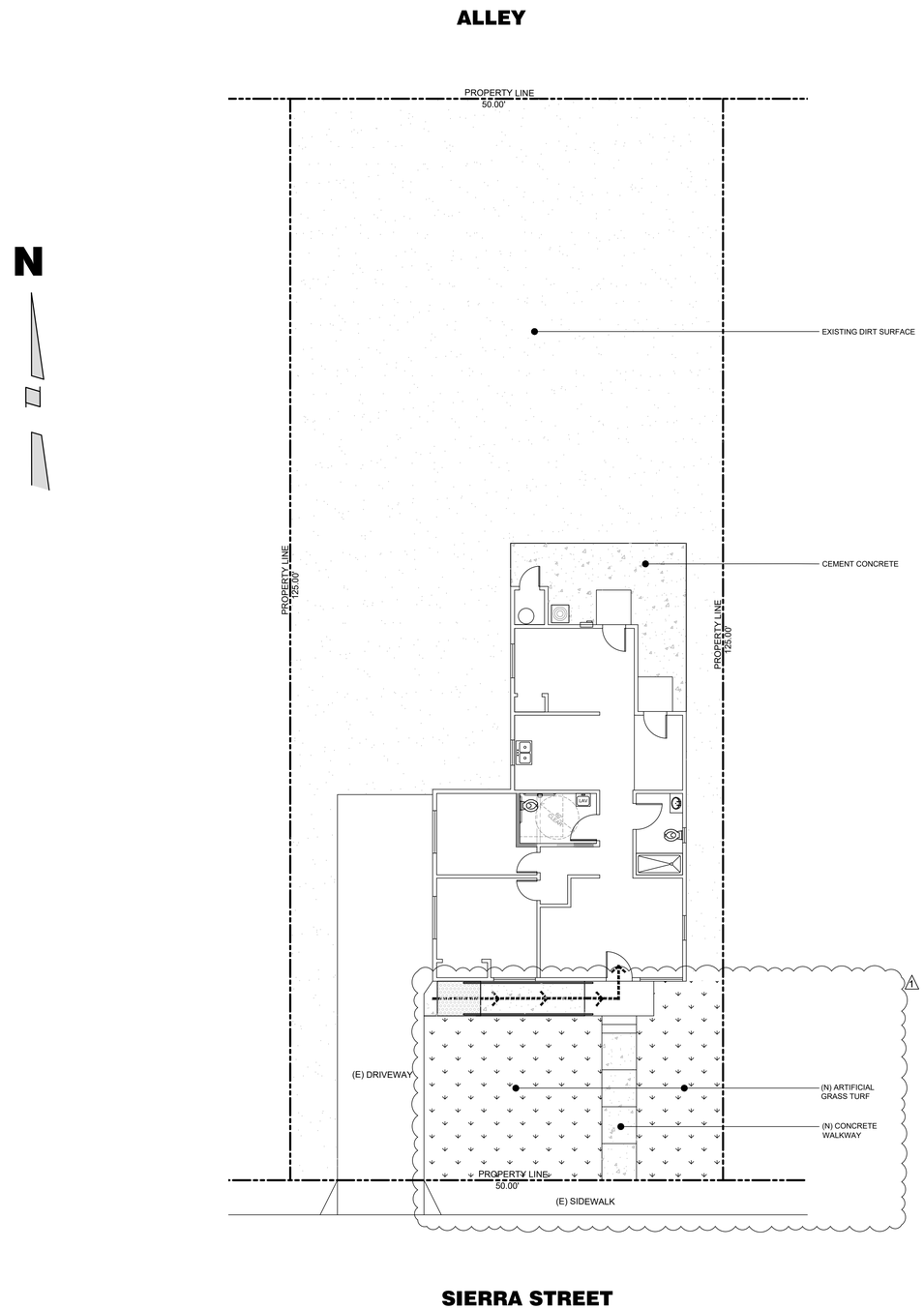

LANDSCAPING PLAN

SCALE	
1/8" = 1'-0"	1

DESIGN

PROJECT INFORMATION:

CONVERSION OF EXISTING SINGLE FAMILY HOME TO OFFICE /COMMERCIAL USE

3205 SIERRA STREET
RIVERBANK, CA 95367

CURRENT ISSUE DATE:

11/25/24

ISSUED FOR:

PERMIT

REV.:	DATE:	DESCRIPTION:	BY:
1	04-12-25	PLAN CHECK	

OWNER:

ANA MERLO
2625 ROSE HILL LN.
RIVERBANK, CA 95367

PLANS DRAWN BY:

PERRY DELA CRUZ
2265 VALENCIA COURT
TRACY, CA 95377

DRAWN BY:	CHK.:	APV.:
PD	PD	PD

CONTRACTOR

SHEET TITLE:

LANDSCAPING PLAN

SHEET NUMBER:

SP-2

SYMBOL LEGEND

- STANDARD LIGHT SWITCH-VERIFY SWITCH TYPE WITH OWNER
- D DIMMER AT LIGHTS
- STANDARD DUPLEX OUTLET AT 12" A.F.F. U.N.O.-VERIFY TYPE WITH OWNER
- AFCI ARC-FAULT CIRCUIT INTERRUPTOR-"TAMPER RESISTANT"
- GFI GFI DUPLEX OUTLET WITH GROUND FAULT INTERRUPTER-VERIFY TYPE WITH OWNER
- LED DOWNLIGHT
- CEILING MOUNTED EXHAUST FAN
- SC HARD WIRED COMBINATION SMOKE AND CARBON DETECTOR=VERIFY TYPE WITH OWNER
- VS VACANCY SENSOR SWITCH

PLUMBING NOTES

1. PLUMBING FIXTURES SHALL COMPLY WITH THE 2022 CALIFORNIA BUILDING STANDARDS REQUIREMENTS:
   - a. SHOWER HEADS: MAXIMUM 1.8 GPM @ 60 PSI
   - b. LAVATORY FAUCETS: MAXIMUM 1.2 GPM
   - c. KITCHEN FAUCETS: MAXIMUM 1.8 GPM
   - d. WATER CLOSETS: MAXIMUM 1.28 GALLONS/FLUSH

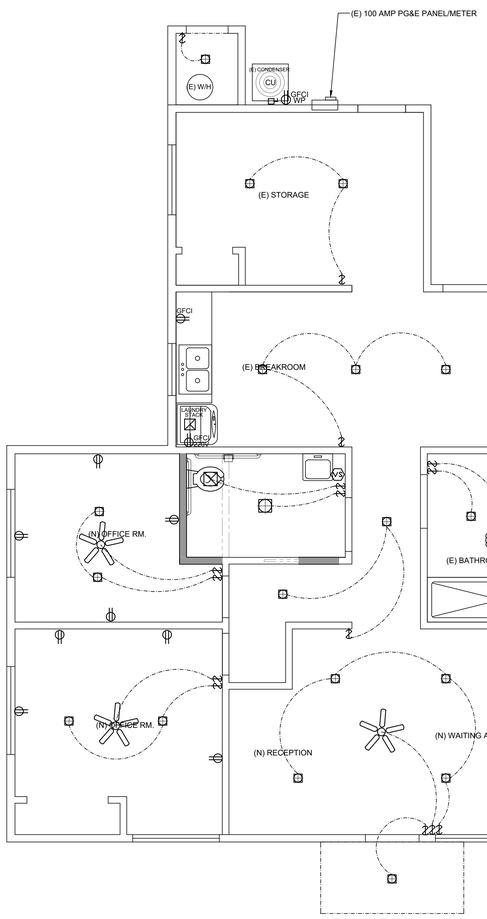

6 ELECTRICAL PLAN

WALL LEGENDS:

- DEMOLITION WALL
- (E) WALL
- NEW INTERIOR NON- BEARING WALL WALL ASSEMBLY - 2 X 4 WOOD STUDS (D.F. NO. 2 OR BETTER) AT 16" O.C. WITH ONE 1 LAYER OF 1/2" GYP. BD. APPLIED BOTH SIDES OF INTERIOR WALL

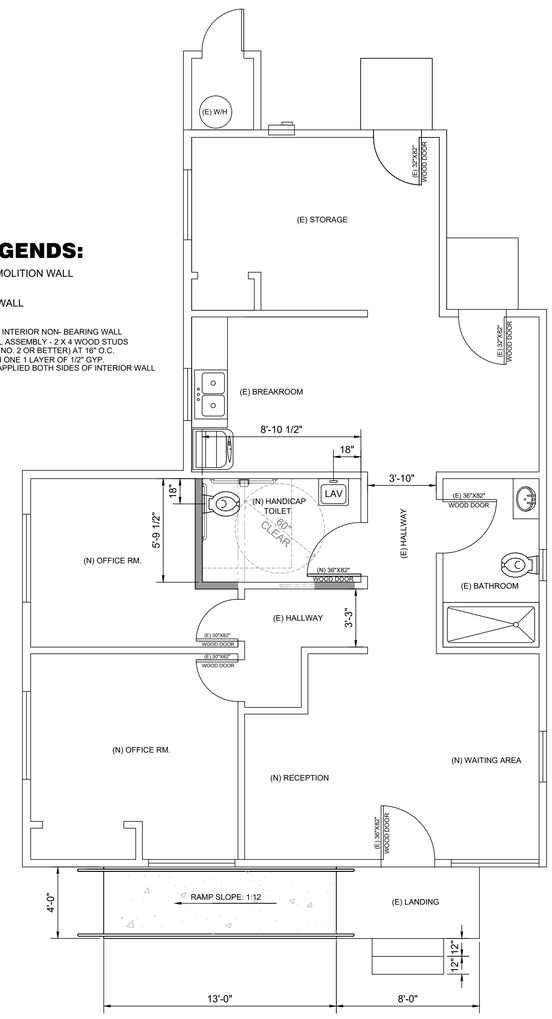

5 FLOOR PLAN

SCALE 1/4" = 1'-0"

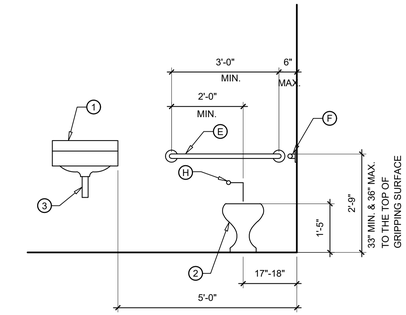

1 ACCESSIBLE STALL FRONT ELEVATION

SCALE = 1/2"=1'-0"

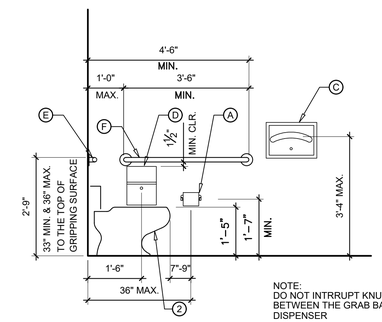

NOTE:
DO NOT INTRRUPT KNUCKLE-SPACE BETWEEN THE GRAB BAR AND THE DISPENSER

2 ACCESSIBLE STALL SIDE ELEVATION

SCALE: 1/2"=1'-0"

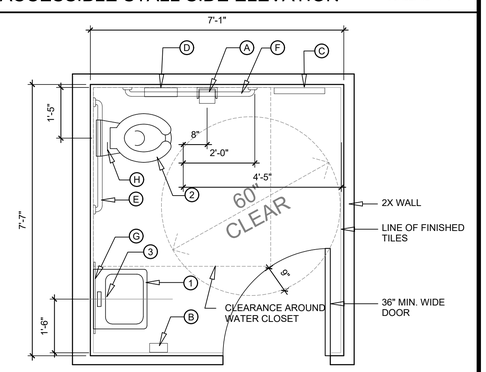

3 ACCESSIBLE STALL / TOILET PLAN

SCALE: 1/2"=1'-0"

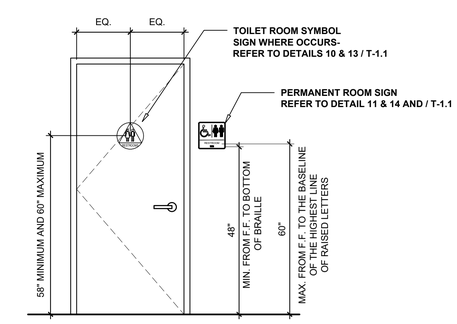

4 DOOR GRAPHIC

SCALE: 1/2"=1'-0"

DESIGN

PROJECT INFORMATION:

CONVERSION OF EXISTING SINGLE FAMILY HOME TO OFFICE /COMMERCIAL USE

3205 SIERRA STREET
RIVERBANK, CA 95367

CURRENT ISSUE DATE:
11/25/24

ISSUED FOR:
PERMIT

REV.:	DATE:	DESCRIPTION:	BY:
1	04-12-25	PLAN CHECK	

OWNER:

ANA MERLO
2625 ROSE HILL LN.
RIVERBANK, CA 95367

PLANS DRAWN BY:

PERRY DELA CRUZ
2265 VALENCIA COURT
TRACY, CA 95377

DRAWN BY:	CHK.:	APV.:
PD	PD	PD

CONTRACTOR:

SHEET TITLE:

FLOOR PLAN/ ELECTRICAL PLAN AND HANDICAP ACCESSIBLE DETAILS

SHEET NUMBER:

A-1

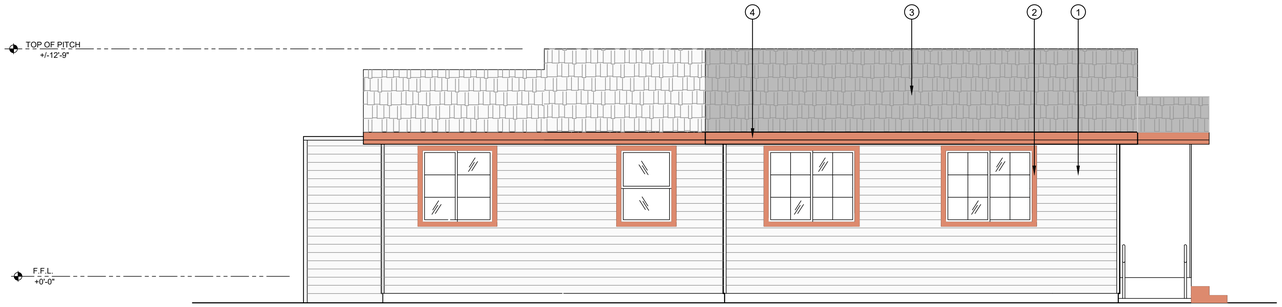

LEFT SIDE ELEVATION

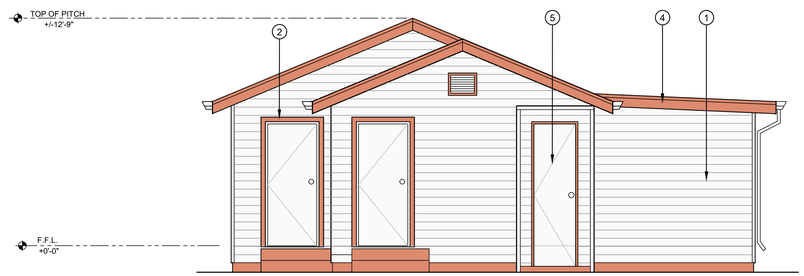

REAR ELEVATION

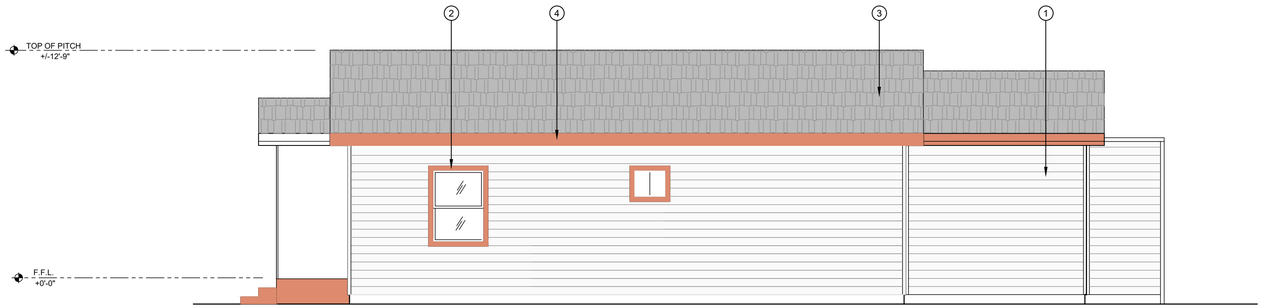

RIGHT SIDE ELEVATION

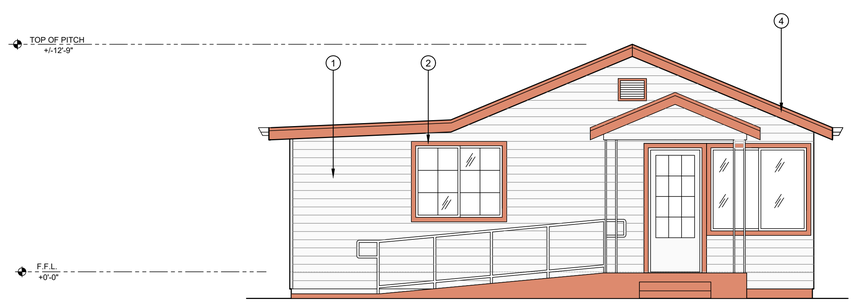

FRONT ELEVATION

COLOR FINISH	TYP. EXTERIOR FINISH SCHEDULE	
EXTERIOR WALL WOOD SIDING SHERWIN WILLIAMS SW 7008 ALABASTER	ITEM NO.	DESCRIPTION
	1	EXTERIOR WALL WOOD SIDING
WINDOW AND DOOR WOOD TRIM SHERWIN WILLIAMS SW 6303 ROSE COLORED	2	WINDOW AND DOOR WOOD TRIM
	3	ASPHALT SHINGLES
WOOD FASCIA BOARD SHERWIN WILLIAMS SW 6303 ROSE COLORED	4	WOOD FASCIA BOARD
	5	WOOD DOOR
WOOD DOOR SHERWIN WILLIAMS SW 7008 ALABASTER		

EXISTING EXTERIOR ELEVATIONS

SCALE 1/4" = 1'-0"

1

DESIGN

PROJECT INFORMATION:

CONVERSION OF EXISTING SINGLE FAMILY HOME TO OFFICE /COMMERCIAL USE

3205 SIERRA STREET
RIVERBANK, CA 95367

CURRENT ISSUE DATE:

11/25/24

ISSUED FOR:

PERMIT

REV.:	DATE:	DESCRIPTION:	BY:

OWNER:

ANA MERLO
2625 ROSE HILL LN.
RIVERBANK, CA 95367

PLANS DRAWN BY:

PERRY DELA CRUZ
2265 VALENCIA COURT
TRACY, CA 95377

DRAWN BY:	CHK.:	APV.:
PD	PD	PD

CONTRACTOR:

SHEET TITLE:

EXISTING EXTERIOR ELEVATIONS

SHEET NUMBER:

A-2

EXHIBIT "B"

CONDITIONS OF APPROVAL

ASPR 11-2024 **3205 SIERRA STREET**

This Project is subject to the following conditions unless specifically exempted, as determined by the Community Development Director or his/her designee.

A. GENERAL CONDITIONS

1. This approval is dependent upon and limited to the proposals and plans contained, supporting documents submitted, presentations made to staff, Planning Commission and/or City Council as affirmed to by the applicant. Any variation from these plans, proposals, supporting documents or presentations is subject to review and approval prior to implementation.

2. The applicant shall secure and comply with all applicable federal, state and local licenses, permits, authorizations, conditions, agreements, and orders prior to or during construction and operation, as appropriate.

3. The applicant shall comply with all regulations and code requirements of the Community Development Director, City Engineer, Building Official, Modesto Regional Fire Authority, Stanislaus Consolidated Fire Protection District, the Police Chief and any other agencies requiring review of the project. If required, these agencies shall be supplied copies of the final maps, site plans, public improvement plans, grading plans and building plans.

4. All conditions of approval for this project shall be written by the project developer on all building permit plan check sets submitted for review and approval. These conditions of approval shall be on, at all times, all grading and construction plans kept on the project site. It is the responsibility of the building developer to ensure that the project contractor is aware of, and abides by, all conditions of approval. Prior approval from the Planning Manager must be received before any changes are constituted in site design, grading, building design, building colors or materials, etc.

5. Site development plans shall be in substantial conformance to the approved site plan and must be submitted, in English units, to the City Engineering Department for review and approval. Maps shall be prepared, wet signed and sealed by a civil engineer, land surveyor, or architect registered in the State of California and licensed to prepare site development plans.

6. The applicant shall take all necessary measures to ensure that his activities or those of his agents do not result in measurable erosion of soils on the site, either wind or water, during the construction and operation of the project covered by this approval.

7. Should the project be found, at any time, not to be in compliance with any of the Conditions of Approval, or should the applicant construct or operate this development in any way other than specified in the Application or Supporting Documents or presentations to staff, Planning Commission or City Council, as modified by the Conditions of this Approval, then the terms of this Approval shall be considered to be violated.

8. If construction or operation of the activity is not begun within one year, this entitlement shall lapse and the applicant shall reapply to the City of Riverbank for a new project entitlement. The applicant may not begin construction or operation of the activity until a new entitlement is granted. Reapplications for entitlement shall state the reasons why the applicant will be able to begin the activity within a year from the granting of a new entitlement, if so granted. Reapplications for entitlement may include information submitted in the initial application by reference. The zoning will not expire; however, any associated applications (except lot line adjustments, boundary adjustments, vacation and abandonment applications) will expire, unless otherwise stated in the conditions of approval. The application(s) will expire in one year at 5:00 p.m. on the expiration date (holidays and weekends will not extend the expiration day). Any extension of time must be applied for prior to 5:00 p.m. on the expiration date.

9. Work done by a contractor pursuant to this approval shall not begin before the contractor has been shown by the applicant a copy of this permit.

10. The hours of construction, including equipment warm-up, shall be limited to 7:00 a.m. -6:30 p.m. on weekdays and 8:00 a.m. - 5:00 p.m. on weekends and legal holidays.

11. Development of the property must conform to the plans as submitted with revisions as specified by the City of Riverbank City Council and / or Planning Commission.

12. All new construction requires building permits in accordance with all applicable building and fire codes and submission of a plot and grading plan prepared by a registered professional civil engineer showing property lines, building locations, topography and such other data as required by the Community Development Department.

13. All geologic hazards must be plotted on a plot plan, and habitable structures shall comply with the restrictions specified in all applicable building and fire codes.

14. Drainage and / or traffic studies must be submitted and approved and all improvements must comply with the approved studies. Further, street and storm water management dedication and / or improvements may be required.

15. If the property is located in a flood zone, a drainage study must be submitted to and approved by the Floodplain Administrator prior to any permits being issued.

16. Fire hydrants must be provided in compliance with Fire Department specifications and a three foot fire hydrant, a 10 foot PUE is typically required and the fire hydrant can be in that easement if it cannot be within the right of way easement is required around all street frontage lot lines. Waivers of street improvements do not waive fire hydrant requirements.

17. All necessary utility easements shall be retained or reserved.

18. Approval of this application does not constitute approval of any other entitlement or any other necessary permit, license, or approval.

19. The developer shall pay all applicable processing fees, permit fees, City development fees, fire fees, school fees, drainage fees and other public entity fees in effect at the time of the issuance of the applicable permit.

20. The property owner/manager/HOA shall be responsible for the maintenance of all common areas, such as landscaping, parking, access roads, and easements.

21. With respect to any claim, action of proceeding against the City, its officials, employees or agents relating to the action or inaction of the City in reviewing, approving or denying entitlements of any type, the Developer agrees to indemnify, hold harmless and defend the City and its elected and appointed councils, boards, commissions, officers, agents, employees, and representatives from any and all claims, costs, and liability for claims of damage, for any property damage or personal injury, including death, which may arise as a result of any negligent acts or omissions by Developer or Developer's contractors, subcontractors, agents, or employees in connection with the construction, improvement, or operation, of the Project. Developer agrees to indemnify, hold harmless and defend the City and its officers, agents, employees, and representatives from any and all actions for damages caused or alleged to have been caused by Developer's activities in connection with the Project. This Agreement applies to all damages and claims for damages suffered or alleged to have been suffered arising out of or in connection to any and all Project operations, regardless of whether or not the City prepared, supplied or approved plans or specifications or both for the Project.

22. In the event any legal action or special proceeding is commenced by any person or entity challenging any agreements between Developer and City, any entitlement or component of the Project such as the Project EIR, or any other City approval for the Project (collectively, "Project Litigation"), the Parties agree to cooperate with each other as set forth herein. City may elect to tender the defense of any lawsuit filed and related in whole or in part to Project Litigation. Upon the commencement of Project Litigation, Developer will indemnify and hold harmless the City from all costs and expenses incurred related thereto, including, but not limited to, damages, attorneys" fees and expenses of litigation awarded to the prevailing party or parties in such litigation. Developer shall pay all litigation fees to the City within thirty (30) days of receiving a written request and accounting of such fees and expenses from the City. Notwithstanding the aforementioned, City may request a deposit to cover City's reasonably anticipated Project Litigation fees and costs, and Developer will provide such deposit to City within seven (7) days of any such request.

23. It is required by State Law (Business and Professional Code Section No. 5537 & 5538 and Section 302(b) of the Uniform Building Code) that all commercial buildings, new or existing must have a licensed professional designer (Architect, Civil or Structural Engineer) to design all changes of use or occupancy as well as new construction.

24. This approval may be recalled to the Planning Commission for review at any time due to complaints regarding lack of compliance with conditions of approval, traffic congestion, noise generation, or other adverse operating characteristics. At such time, the Commission may revoke the approval or add/modify conditions approval.

25. It is the responsibility of the applicant or developer to check with each agency for requirements that may pertain to their project.

26. The applicant shall negotiate school mitigation with the appropriate School District before issuance of building permit. Applicant shall present evidence of School District compliance to the City of Riverbank.

27. The project shall annex into a storm water management district for on-going maintenance of the public system.

28. The project shall annex into a Community facilities district for the on-going Public Services operations including Fire and Police services.

29. Where required, automatic fire sprinkler systems shall be designated and installed in compliance with NFPA (National Fire Protection Association) standards. Fire Department Connections (FDC‟s) shall be located within 50 feet of a fire hydrant.

30. The grade of the fire apparatus access road shall be within the limits established by the code official based on fire apparatus. (Shall not exceed 10 percent.)

31. Fire apparatus access roads shall be designated and maintained to support the imposed loads of fire apparatus (75,000 pounds) and shall be surfaced so as to provide all-weather driving capabilities.

32. Where applicable, NO PARKING – FIRE LANE signage and/or marking(s) shall be provided for fire apparatus access roads to identify such roads or prohibit the obstruction thereof.

33. All storm drains, which serve the site, shall be protected from spills and soil runoff (from unpaved parking areas). The applicant may use "Any Source Control" BMP (Best Management Practice) as listed in the California Storm Water Best Management Practice Handbook for storm water run-off for commercial and industrial sites. Storm drains will be inspected periodically.

34. The applicant shall comply with all regulations and code requirements of the Community Development Department, Public Works Department, Stanislaus Consolidated Fire Protection District, the Sheriff's Department and any other agencies requiring review of the project. If required, the applicant shall be responsible to insure that these agencies are supplied copies of the final building and site plans.

35. Developer shall provide written notification to adjacent property owners for any drainage work required to collect or convey storm water runoff, which may or will affect their properties.

36. Developer shall install off-street improvements determined necessary by the City Engineer to provide safe traffic conditions.

37. Developer shall underground existing and required on and off-site utilities as deemed necessary by the Public Works Department.

38. All off-site development shall comply with all applicable provisions of the Riverbank Municipal Code as determined by the City Engineer. Issuance of an encroachment permit will be

required whereby specific engineering requirements will be made as conditions of approval of that permit.

B. ARCHITECTURE

1. All mechanical, irrigation, ground and/or roof mounted equipment shall be architecturally screened from view from all public right-of-ways prior to issuance of certificate of occupancy.

2. All trash enclosures shall be constructed of masonry material with self-enclosing doors and have a second access and a sloped roof. The enclosure shall have materials and colors consistent with the primary building.

3. All vents, gutters, downspouts, flashing, electrical conduits, etc., shall be painted or finished to match the color of the adjacent surface unless otherwise directed by the Planning Commission.

4. Soffits and other architectural elements visible from view but not detailed on the plans shall be finished in a material in harmony with the exterior of the building.

5. Finish quality of exterior design elements including, but not limited to, building façade landscaping shall be subject to approval of the Community Development Director prior to issuance of Certificate of Occupancy.

6. All signs shall be submitted to the Community Development Director for design review per the sign ordinance of the Riverbank Municipal Code.

7. All outdoor mechanical equipment, satellite dishes, fire main and all rooftop equipment shall be fully visually screened upon installation subject to the approval of the Community Development Department. Screening devices shall be shown on construction and/or landscape plans.

8. All exterior light fixtures shall be shown on plans subject to staff review and approval. All lights attached to buildings shall provide a soft “wash” of light against the wall. All building and parking or yard lights shall conform to City Standards and shall compliment the site and building architecture.

9. For residential projects, the CC&R's shall restrict the storage of recreational vehicles on this site or parcels unless they are the principle source of transportation for the owner and prohibit parking on the public street for long than 72 hours.

C. LANDSCAPING

1. Specific landscaping for screening shall have an appearance of mature growth subject to a field check and approval by the Community Development Director prior to Certificate of Occupancy.

2. The area under the drip line of all existing trees, which are to be saved, shall be fenced during construction. Grading shall be restricted under them to prevent soil compaction around the trees and to protect them from damage.

3. An existing tree inventory shall be created and included on the site plan for all new projects prior to approval of grading plan.

4. All slope banks in excess of two (2) feet in vertical height shall be landscaped and irrigated for erosion control and to soften their appearance as follows: one 15-gallon or larger size tree per each 150 sq. ft. of slope area, one 1- gallon or larger size shrub per each 100 sq. ft. of slope area, and appropriate ground cover 12-24 inches on-center. In addition, slope banks in excess of five (5) feet in vertical eight also include one 5-gallon or larger size tree per each 250 sq. ft. of slope area. Trees and shrubs shall be planted in staggered clusters to soften and vary slope plane. Slope planting required by this condition shall include a permanent irrigation system to be installed by the developer prior to occupancy.

5. All planting shall be maintained in good growing condition. Such maintenance shall include, where appropriate, pruning, mowing, weeding, cleaning of debris and trash, fertilizing and regular watering. Whenever necessary, planting shall be replaced with other plant materials to insure continued compliance with applicable landscaping requirements. Required irrigation systems shall be fully maintained in sound operating condition with heads periodically cleaned and replaced when missing to insure continued regular watering of landscape areas, and health and vitality of landscape materials.

6. Final inspection for occupancy permits will not be granted until all construction and landscaping is complete in accordance with approved plans.

7. All landscape areas shall be maintained in a healthy, thriving and weed free condition.

8. The site shall be maintained in a neat and clean manner free of trash and debris.

9. All walls adjacent to public right-of-ways shall be provided with decorative treatment, subject to approval by the Community Development Director. Walls shall match or harmonize with existing sound walls of neighboring projects along that street.

D. IMPROVEMENT PLANS

1. All utilities shall be installed in conformance with existing City policy including without limitation the City of Riverbank Subdivision, Zoning Ordinances and the Downtown Specific Plan (DTSP).

2. Right of way or easement acquisitions necessary to implement any portion of this map, and/or site development plan, including public improvements, shall be obtained by the developer at its sole expense prior to the City's consideration of the final map which encompasses the particular improvement. The developer shall notify the City in writing no more than 120 days and no less than 60 days in advance of filing the final map related to the acquisition if City assistance is needed to complete the acquisition pursuant to Government Code Section 66462.5. Funds in an amount of 100% of the estimated acquisition costs shall be deposited with the City to cover appraisal, right of way agent, and legal fees and costs incurred to secure the necessary property.

3. Environmental and engineering studies, as directed by the Community Development Director, must be complete and on file prior to commencement to plan checking.

4. Developer shall install off-street improvements determined necessary by the City Engineer to provide safe traffic conditions.

5. The Applicant shall submit a complete area water pressure availability study for all phases of the Project prior to issuance of any development permits. If the study indicates that the present system is inadequate, the Applicant must provide plans, with existing water, sewer and utilities software simulation program that will demonstrate any remedial action necessary to abate the deficiency and shall submit for plan check and take all necessary actions at the applicant’s expense.

6. All site development shall comply with all applicable provisions of the City of Riverbank Municipal Code as determined by the City Engineer. Issuance of a site development permit

will be required whereby specific engineering requirements will be made as conditions of approval of that permit.

7. Meters, hydrants, poles, etc. shall be located clear of the sidewalk and driveways or as determined by the City Engineer. Final locations and the number of such facilities shall be determined at the time the improvement plans are reviewed.

8. An encroachment permit shall be required for any construction to be done in the public right of way, in easements, or on lands to be dedicated to the City of Riverbank upon completion of the improvements. The encroachment permit shall be obtained prior to the start of said work. The permit fees shall be determined per the current adopted development fee schedule.

9. Due to LID requirements, on site storage, retention/detention should be permitted.

10. Any portion of the drainage system that conveys runoff from public streets shall be installed within a dedicated drainage easement or public street.

11. The developer shall provide joint trenching for telephone, gas, electric, cable TV and fiber optic service for every parcel.

12. All improvements, public and private, shall be designed and constructed in accordance with the most recent edition of the Standard Plans and Specifications all applicable state and local ordinances, standards and requirements. Should a conflict arise, the governing specification shall be determined by the City Engineer.

13. All public improvements proposed by the developer or required through these conditions of approval shall be completed and accepted by the City in compliance with the time schedule set forth in the conditions of approval; if no time schedule is provided, then no later than recordation of the parcel map. The developer may apply to the City for a Subdivision Improvement Agreement or Deferred Improvement Agreement in order to postpone completion of the public improvements. In any event, the City shall require the developer to guarantee the performance of the improvements and payment of labor and materials by furnishing security in a form acceptable to the City.

14. Developer shall ensure finished pad elevations are at a minimum one foot above the 100-year base flood elevation as shown on the latest Federal Emergency Management Agency (FEMA) floodplain maps for Stanislaus County, California. The developer shall be responsible for all necessary activities, applications, documentation and costs to amend floodplain maps for their development. [Letter of Map Amendment Revision (LOMAR)], and for obtaining a Floodplain Permit from the Community Development Director for all projects on parcels identified in Zone "A" on the FEMA Flood Insurance Rate Maps for the City of Riverbank. Application for LOMAR shall be prepared and submitted by the

developer prior to grading permit issuance or final map approval, whichever occurs first.

15. Regional and Sub-regional Drainage fees shall be paid in an amount acceptable to the City Engineer prior to approval of the final map.

16. Detailed plans reflecting the design and construction of all public infrastructure improvements for street, sewer, water, and storm drain, both on- and off-site, shall be in conformance with the adopted Infrastructure Master Plans and as directed by the City Engineer. Developer shall have written approval from the City Engineer for any variations from the City's Master Plans prior to any final map or plan approval.

17. All on and off-site development and improvements shall be designed and constructed at the sole expense of the developer. The developer may apply for reimbursement for those improvements deemed eligible by the City Engineer as oversized in accordance with the City's laws and the State Subdivision Map Act in effect at the time of the developer's application for reimbursement to the City Council. Any such application must be presented to the City Council on or before the City records the first final map. The City's method of reimbursement shall not be limited, and may be memorialized through a reimbursement agreement with the Developer.

18. The sub divider shall submit plans and specifications for improvements of all public and private street rights-of-way, drainage easements, culverts, drainage structures and drainage facilities to the Department of Public Works for approval by the City Engineer.

19. Street alignments and grades, including the change of any existing or proposed street alignment and grade, shall be as required by the Community Development Director and the City Engineer.

20. The exact depth of imported base material shall be based on soil tests which have been approved by the Director of the Department of Public Works.

21. Sight distance requirements at all street intersections shall conform to City Standards.

22. If the improvement plans show a need to excavate in any public road right-of-way, the developer shall place a cash deposit with the Department of Public Works to ensure that any damage to the existing roadway is repaired in a timely manner.

23. Portland cement concrete cross gutters or culverts shall be installed where water crosses the roadways.

24. An adequate energy dissipater shall be constructed at the outlet of the storm drain, or verification shall be provided that such improvement is not needed.

25. Hydrology and hydraulic calculations for determining the storm system design, with water

surface profile and adequate field survey cross section data, shall be provided satisfactory to the Director of the Department of Public Works, or verification shall be provided that such calculations are not needed.

26. Developer shall submit a study addressing on and off-site storm water and/or sewer system capabilities. If the study indicates that the present systems are inadequate, the developer must provide plans and install any additional storm water and/or sanitary and sanitary sewer facilities, including off-site improvements, to correct storm water run-off and sanitary sewer demands anticipated for upstream build-out in accordance with the Riverbank General Plan.

27. Prior to occupancy, the developer shall supply the City with an ACAD computer disk file showing plans that reflect the project as it was built (As-Builts) to the satisfaction of the City Engineer. These plans shall be 3D.

28. The installation (if required) of all gas, electric, sewer, and water lines and any other below surface utilities is to take place before the installation of any concrete curbs, gutter, sidewalks, and the surfacing of the streets.

29. All walls adjacent to public right-of-ways shall be provided with decorative treatment, subject to approval by the Community Development Director.

E. GRADING PLANS

1. Prior to the issuance of any grading permits, if the applicant submits a grading plan which the City Engineer, determines to show a significant deviation from the grading shown on the approved tentative map, specifically with regard to slope heights, slope ratios, pad elevations or pad configuration, the Planning Commission shall review the plan for a finding of substantial conformance. If the Planning Commission fails to make such a finding, the applicant shall process a revised tentative map; or, if a final map has been recorded, the applicant shall process a new tentative map or a site development permit application per City of Riverbank Municipal Code. Additionally, the applicant shall process a new environmental assessment for determination by the decision making entity.

2. Prior to the issuance of a grading permit, the applicant shall submit a geotechnical report to the City Engineer, Subdivision and Grading, for approval. The report shall include the information and be in the form as required by the City Engineer

3. Prior to the issuance of any preliminary grading permits, the applicant shall provide evidence to the City Engineer, that the Vector Control District has surveyed the site to determine if

vector control measures are necessary. If the District determines measures are warranted, the applicant shall conduct such measures in a manner meeting the approval of the City Engineer.

4. Prior to the issuance of any grading permit or revisions thereto, the Community Development Director shall determine that the proposed grading is consistent with the grading depicted within this approved planning application.

5. The sub divider shall submit grading plans, a permit application, and plan check and inspection fees and deposits to the Department of Public Works. Grading plans shall be approved prior to or concurrently with the approval of the Improvement Plans.

6. The grading plan shall contain a certificate signed by a registered civil engineer that the grading plan has preserved a minimum of 100 square feet of solar access for each lot created by this subdivision pursuant to Section 81.401(n) of the Subdivision Ordinance.

7. Finished grading shall be certified by a registered civil engineer and inspected by the City Engineer for drainage clearance. Approval of rough grading does not certify finished grading due to potential surface drainage problems that may be created by landscaping accomplished after rough grading certification.

8. Developer shall provide written notification to adjacent property owners for any drainage work required to collect or convey storm water runoff, which may or will affect their properties.

9. 6” high Portland Concrete Cement curbing shall be provided between all driveways and landscaped areas as indicated in the City of Riverbank Standard Plans and Specifications. In addition to above, curbing between length of parking space and landscaped area shall include a 12” wide “Courtesy Curb.” Curb Cuts shall be allowed to conform to LID Standards.

10. During construction water trucks or sprinkler systems are to be used in sufficient quantities to prevent dust from leaving the site during any earthmoving and/or construction activities.